UNIFIED DIVERLESS SUPPORT TUBE - TSUDL

#	DESCRIPTION	DRAWING NUMBER	REV	QTY
1	TSUDL ASSEMBLY	I-DE-3010.00-1300-270-P56-003	rev. B	1
2	TSUDL CENTRAL STRUCTURE	I-DE-3010.00-1300-270-P56-004	rev. A	1
3	TSUDL BRACER	I-DE-3010.00-1300-270-P56-005	rev. 0	2
4	LATERAL SUPPORT MODULE - MTL	I-DE-3010.00-1300-270-P56-001	rev. B	8
42	5K HYDRAULIC ACTUATOR ASSEMBLY	I-DE-3010.00-1300-279-PEK-003	rev. 0	8

TSUDL UPPER CONE COMPONENTS

#	DESCRIPTION	DRAWING NUMBER	REV	QTY
5	UPPER CONE	I-DE-3010.00-1300-270-P56-006	rev. C	1
6	LOCKING WEDGE	I-DE-3010.00-1300-270-P56-007	rev. B	8
7	LOCKING WEDGE GUIDE	I-DE-3010.00-1300-270-P56-008	rev. B	8
8	DRIVE RING	I-DE-3010.00-1300-270-P56-009	rev. C	1
9	DRIVE RING FLANGE	I-DE-3010.00-1300-270-P56-010	rev. B	4
10	GUIDE RAIL	I-DE-3010.00-1300-270-P56-011	rev. A	8
11	GUIDE RAIL BUSHING	I-DE-3010.00-1300-270-P56-012	rev. A	8
12	PULL-IN WEAR BUSHING	I-DE-3010.00-1300-270-P56-013	rev. A	8
13	SHAFT (FEMALE)	I-DE-3010.00-1300-270-P56-014	rev. B	8
14	SHAFT (MALE)	I-DE-3010.00-1300-270-P56-015	rev. B	8
15	LOCKING WEDGE PIN	I-DE-3010.00-1300-270-P56-016	rev. 0	8
16	BRACER PIN	I-DE-3010.00-1300-270-P56-017	rev. A	8
17	SHAFT BUSHING	I-DE-3010.00-1300-270-P56-018	rev. B	8
18	CONE SPRING	I-DE-3010.00-1300-270-P56-019	rev. B	8
19	SPRING BUSHING	I-DE-3010.00-1300-270-P56-020	rev. A	16
20	SHAFT ROLLER	I-DE-3010.00-1300-270-P56-021	rev. B	8
21	CAM BUSHING	I-DE-3010.00-1300-270-P56-022	rev. B	8
22	DOUBLE CAM	I-DE-3010.00-1300-270-PX9-001	rev. 0	8
40	PROTECTION CAP	I-DE-3010.00-1300-270-P56-050	rev. 0	1

TSUDL UPPER CONE MECHANISM

#	DESCRIPTION	DRAWING NUMBER	REV	QTY
23	UPPER CONE HYDRAULIC CILINDER[1]	I-DE-3010.00-1300-270-P56-049	rev. A	1
24	ROV TIE BAR[2]	I-DE-3010.00-1300-270-P56-024	rev. A	1

[1] HYDRAULIC CYLINDER FOR TOPSIDE ACTUATON. SPECIFICATIONS ON I-ET-3010.00-1519-140-P56-001
[2] MECHANISM TO BE INSTALLED AND OPERATED BY ROV (BACK-UP MECHANISM)

TSUDL LATCH BAR COMPONENTS[3]

#	DESCRIPTION	DRAWING NUMBER	REV	QTY
25	ROUND BLOCK (BSDL-SI)	I-DE-3010.00-1300-279-P56-355	rev. D	8
26	LATCH BAR	I-DE-3010.00-1300-279-PPC-306	rev. F	8
27	AXIS	I-DE-3010.00-1300-279-PPC-307	rev. D	8
28	REACTION BLOCK	I-DE-3010.00-1300-279-PPC-308	rev. C	8
29	STRUCTURAL WASHER	I-DE-3010.00-1300-279-PPC-309	rev. B	16
30	SPRING	I-DE-3010.00-1300-279-PPC-310	rev. G	16
31	CENTRALIZER	I-DE-3010.00-1300-279-PPC-311	rev. D	8
32	HANDLER (BSDL-SI)	I-DE-3010.00-1300-279-P56-362	rev. C	8
33	SLIDING PLATE	I-DE-3010.00-1300-279-PPC-313	rev. A	16
34	PIVOT BOLT	I-DE-3010.00-1300-279-PPC-314	rev. B	16
35	EYE PLATE	I-DE-3010.00-1300-279-PPC-318	rev. C	8

[3] MECHANISM FOR FLEXIBLE RISER CONNECTION BASED ON BSDL-SI 48" DESIGN

TSUDL STANDARD PARTS AND CATHODIC PROTECTION ELEMENTS[4]

#	DESCRIPTION	Ø	LENGTH	MATERIAL	REV	QTY
#	- - - -	#	#	- - - -	-	#
#	- - - -	#	#	- - - -	-	#
#	- - - -	#	#	- - - -	-	#

[4] THIS PART LIST PRESENTS ONLY THE MAIN COMPONENTS OF THE FEED DESIGN. SUPPLYER SHALL PROCEED FOR A DETAILED DESIGN, INCLUDING MINOR

FACTORY ACCEPTANCE TEST (FAT) COMPONENTS[5]

#	DESCRIPTION	DRAWING NUMBER	REV	QTY
36	DUMMY HOA (TSUDL)	I-DE-3010.00-1300-270-P56-025	rev. A	1
37	DUMMY CAP (TSUDL)	I-DE-3010.00-1300-279-P56-373	rev. B	1

[5] ONLY ONE PART MUST BE MANUFACTURED TO TEST ALL SUPPLIED TSUDL - SEE I-ET-3010.00-1519-140-P56-002

INTERFACE SHAPE FOR RISER DESIGN[6]

#	DESCRIPTION	DRAWING NUMBER	REV	QTY
38	TSUDL HANG-OFF ADAPTOR	I-DE-3010.00-1300-279-P56-011	rev. A	-
39	CAP DL (BSDL-SI)	I-DE-3010.00-1300-279-P56-375	rev. A	-
41	MOCKUP FOR FITUP TEST	I-DE-0000.00-0000-140-P56-002	rev. A	-

[6] NOT NECESSARY FOR TSUDL SUPPLY. THIS DRAWING IS INTENDED TO DEFINE THE RISER TOP TERMINATION BASIC DESIGN

REFERENCE DOCUMENTS

I-ET-3010.00-1300-279-PX9-001 - UNIFIED DIVERLESS SUPPORT TUBE (TSUDL) - GENERAL REQUIREMENTS

GENERAL NOTES

1- UPDATED TSUDL DRAWINGS WILL BE ISSUED UNTIL NOTICE TO PROCEED.

CX4H U4B8 NTHF

REV.	DESCRIPTION	DATE	EXEC.	CHECK	APPROV.
E	REVISED WHERE INDICATED	20/03/2025	CX4H	U4B8	NTHF
D	REVISION COLUMN UPDATED	21/05/2024	RTVH	CX4H;EVJN;UPVT	BF6I
C	GENERAL REVISION	08/11/2022	TGG6	CX4H	U4B8
B	GENERAL REVISION	24/09/2021	BERK	RTVH	BERL
A	MTL REVISION	01/04/2021	BERK	RTVH	BERL
0	INITIAL ISSUE	26/03/2021	BERK	RTVH	BERL

THE DATA, OR PART THEREOF ARE PETROBRAS PROPERTY AND THUS MUST NOT BE USED IN ANY WAY WITHOUT PERMISSION

PETRÓLEO BRASILEIRO S.A. PETROBRAS

SUB

CLIENT OR USER: SUB

JOB OR PROJECT: FPSO UNIT

AREA OR UNIT: PRODUCTION

TITLE: UNIFIED DIVERLESS SUPPORT TUBE (TSUDL) PARTS LIST

DESIGN	DRAWN	CHECK	APPROVAL
TDUT	BERK	RTVH	BERL
SCALE: INDIC	SIZE: A2	CC	SHEET 1 of 1
DATE: 26/03/2021	No. I-LI-3010.00-1300-270-P56-001		

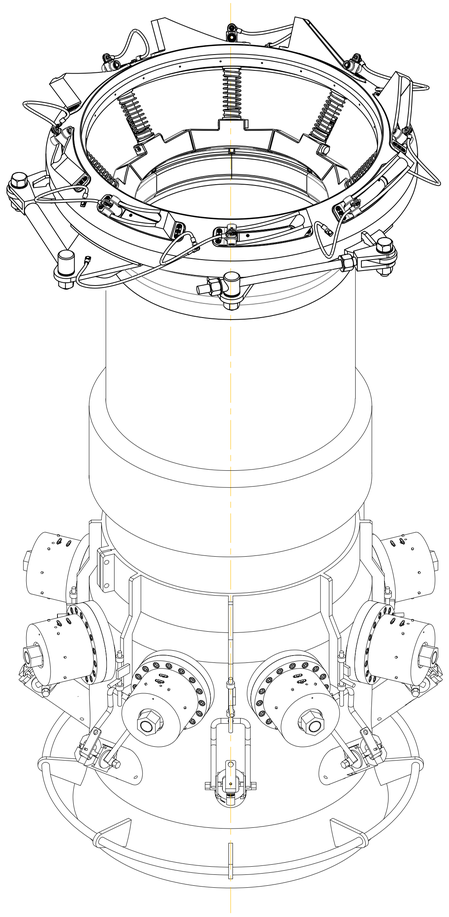

PERSPECTIVE
SCALE: 1:15

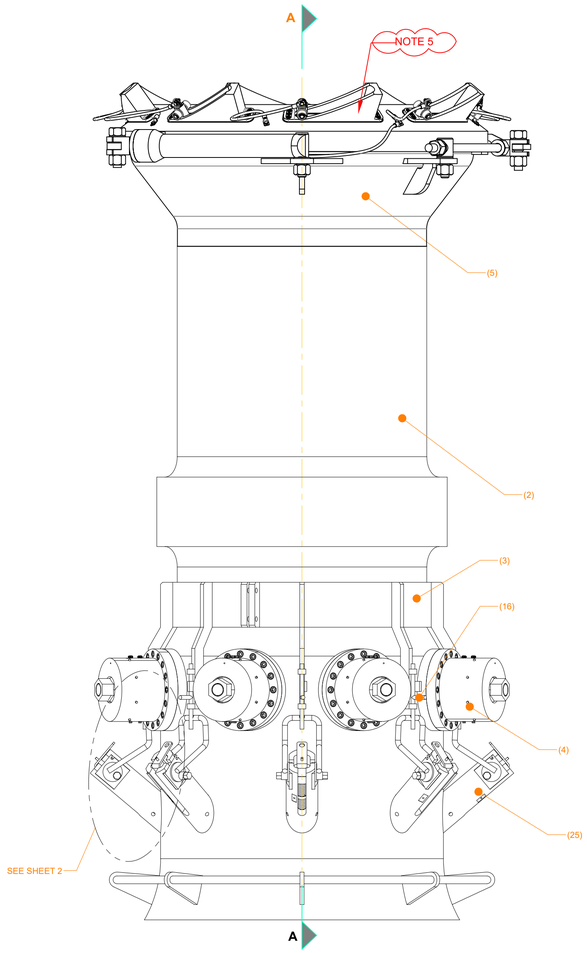

PROFILE VIEW
SCALE: 1:15

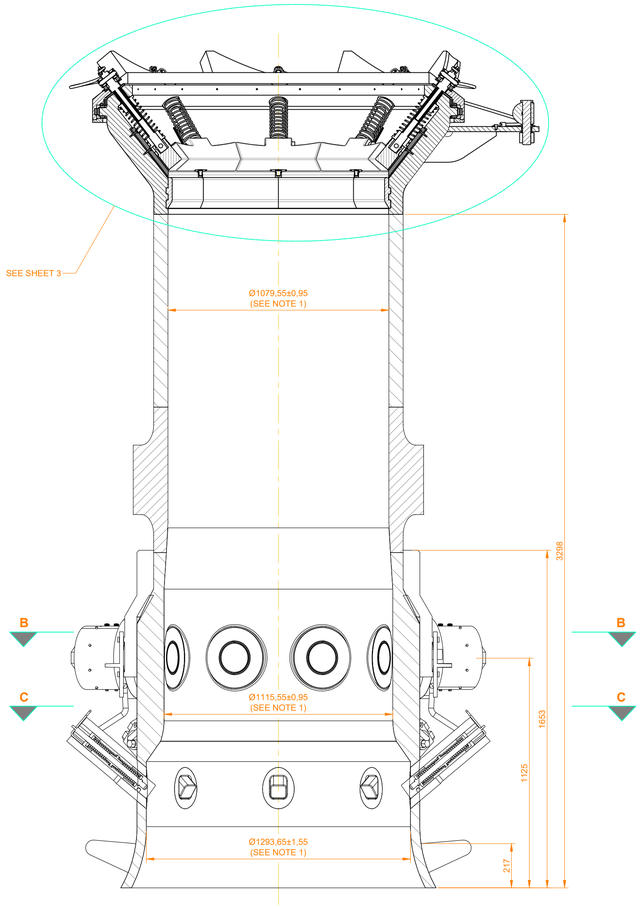

SECTIONA-A
SCALE: 1:15

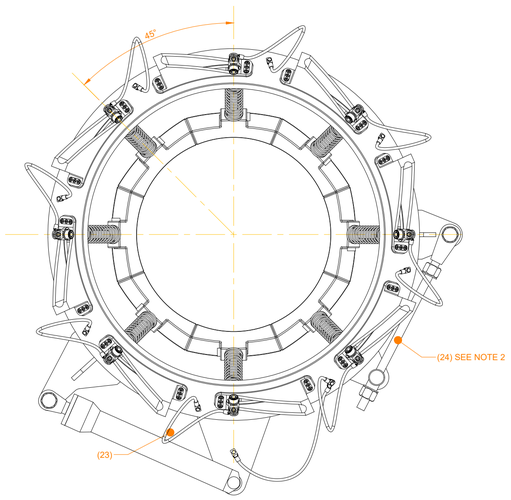

TOP VIEW
SCALE: 1:15

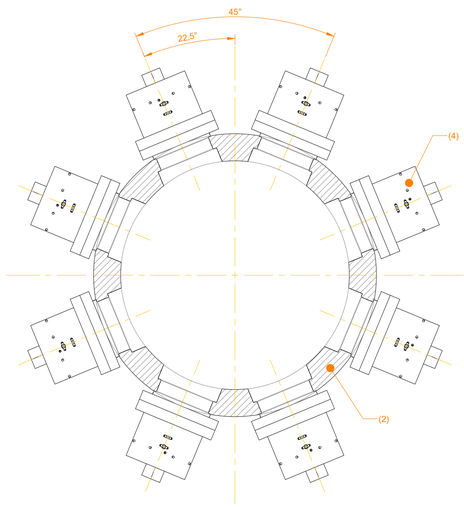

SECTION B-B
SCALE: 1:15

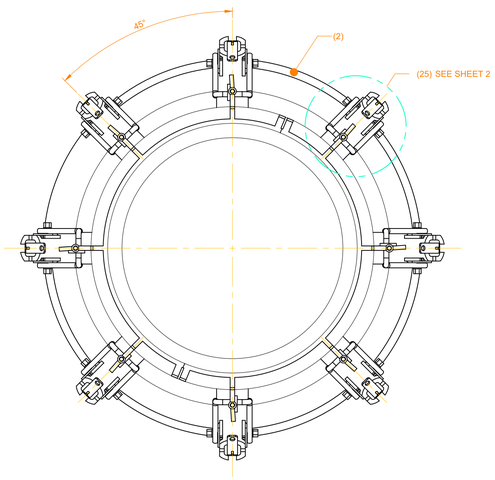

SECTION C-C
SCALE: 1:15

REFERENCE DOCUMENTS

I-ET-3010.00-1300-279-PX9-001 - UNIFIED DIVERLESS SUPPORT TUBE (TSUDL) - GENERAL REQUIREMENTS

GENERAL NOTES

1- DIMENSIONS TO BE VERIFIED AFTER ANTIFOULING PAINTING

2- MECHANISM TO BE INSTALLED AND OPERATED BY ROV ONLY IN CASE OF HYDRAULIC CYLINDER FAILURE (BACK-UP MECHANISM). DO NOT ASSEMBLY

3- SEE PARTS LIST AS REFERENCE

4- PARTS

(2) TSUDL CENTRAL STRUCTURE
(3) TSUDL BRACER
(4) LATERAL SUPPORT MODULE - MTL
(5) UPPER CONE
(16) BRACER PIN
(24) ROV TIE BAR
(25) ROUND BLOCK (BSDL-SI)

5 - UPDATED DRAWING INCLUDING CAM DESIGN (DOUBLE OR SIMPLE CAM) WILL BE ISSUED UNTIL NOTICE TO PROCEED.

FEED DESIGN

REV.	DESCRIPTION	DATE	EXEC.	CHECK	APPROV.
B	REVISED WHERE INDICATED	20/02/2025	CX4H	U4B8	NTHF
A	GENERAL REVISION	18/09/2023	RTVH	CX4H	BF6I
0	INITIAL ISSUE	21/07/2022	RTVH	CX4H	U4B8

THE DATA, OR PART THEREOF ARE PETROBRAS PROPERTY AND THUS MUST NOT BE USED IN ANY WAY WITHOUT PERMISSION

PETRÓLEO BRASILEIRO S.A. PETROBRAS

SUB

CLIENT OR USER: E & P

JOB OR PROJECT: FPSO UNIT

AREA OR UNIT: PRODUCTION

TITLE: TSUDL ASSEMBLY

DESIGN	DRAWN	CHECK	APPROVAL
TDUT	RTVH	BERK	BF7F

SCALE	SIZE	CC	SHEET
INDIC	A1		1 of 3

DATE 21/07/2022 | No. I-DE-3010.00-1300-270-P56-003

REFERENCE DOCUMENTS

I-LI-3010.00-1300-270-P56-001

FEED DESIGN

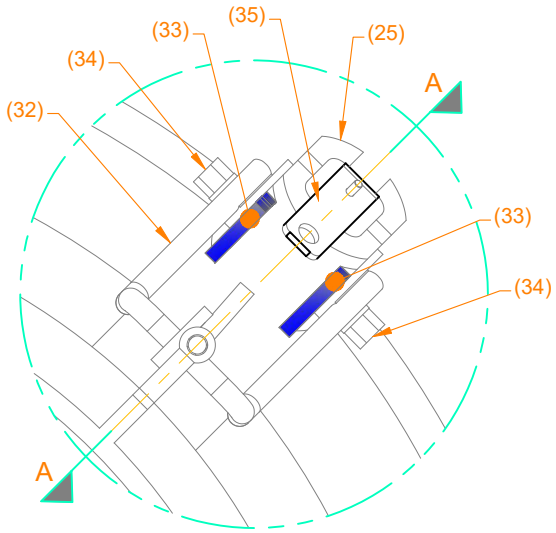

TOP VIEW

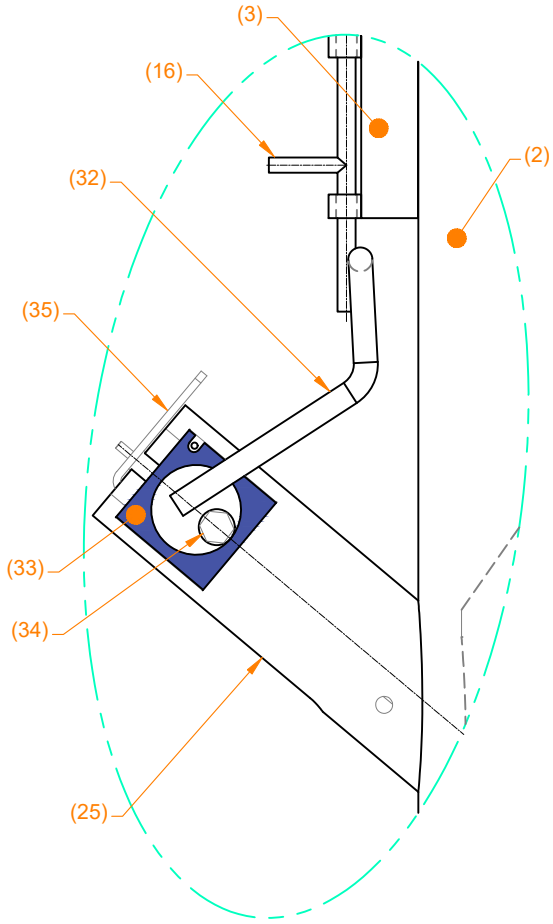

PROFILE VIEW

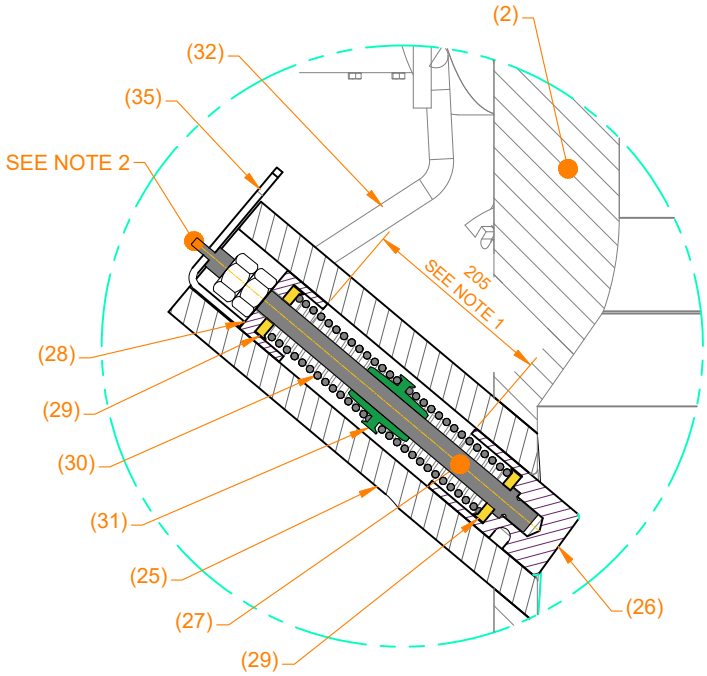

SECTION A-A

GENERAL NOTES

1 - LATCH BAR MECHANISM SHALL BE PRE-ASSEMBLED WITH NUT & JAM NUT UNTIL THE INDICATED DISTANCE OF 205mm IS ACHIEVED

2- SEE PARTS LIST AS REFERENCE

3- PARTS

(2) TSUDL CENTRAL STRUCTURE
(3) TSUDL BRACER
(16) BRACER PIN
(25) ROUND BLOCK (BSDL-SI)
(26) LATCH BAR
(27) AXIS
(28) REACTION BLOCK
(29) STRUCTURAL WASHERS
(30) SPRING
(31) CENTRALIZER
(32) HANDLER (BSDL-SI)
(33) SLIDING PLATE
(34) PIVOT BOLT
(35) EYE PLATE

4 - SEE I-ET-3010.00-1300-279-PX9-001 DESIGN CHANGES TO IMPLEMENT HYDRAULIC ACTUATOR

REV.	DESCRIPTION	DATE	EXEC.	CHECK	APPROV.
B	REVISED WHERE INDICATED	07/02/2025	CX4H	U4B8	NTHF
A	GENERAL REVISION	18/09/2023	RTVH	CX4H	BF6I
0	INITIAL ISSUE	26/03/2021	RTVH	CX4H	U4B8

THE DATA, OR PART THEREOF ARE PETROBRAS PROPERTY AND THUS MUST NOT BE USED IN ANY WAY WITHOUT PERMISSION

PETROLEO BRASILEIRO S.A. PETROBRAS

CENPES

CLIENT OR USER: E & P

JOB OR PROJECT: FPSO UNIT

AREA OR UNIT: PRODUCTION

TITLE: TSUDL ASSEMBLY

DESIGN	TDUT	DRAWN	RTVH	CHECK	BERK
APPROV.	BF7F	SIZE	A4	CC	
DATE	21/07/2022	SCALE	1:10	SHEET	2 of 3

No. I-DE-3010.00-1300-270-P56-003

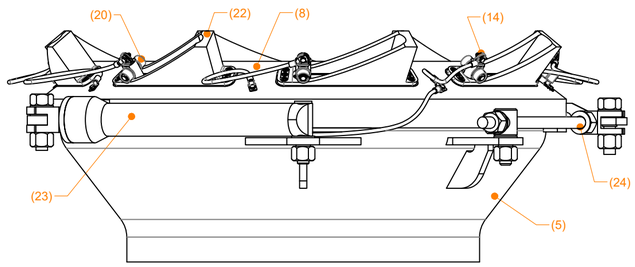

SIDE VIEW
SCALE: 1:15

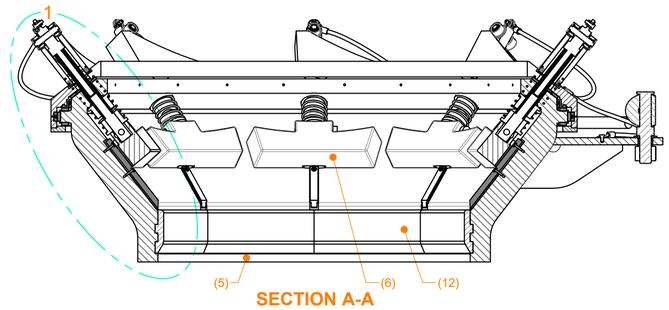

SECTION A-A
SCALE: 1:15

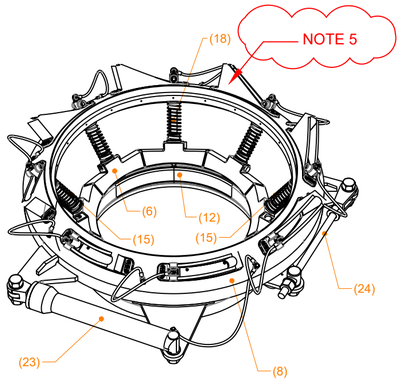

PERSPECTIVE (CLOSED)
SCALE: 1:10

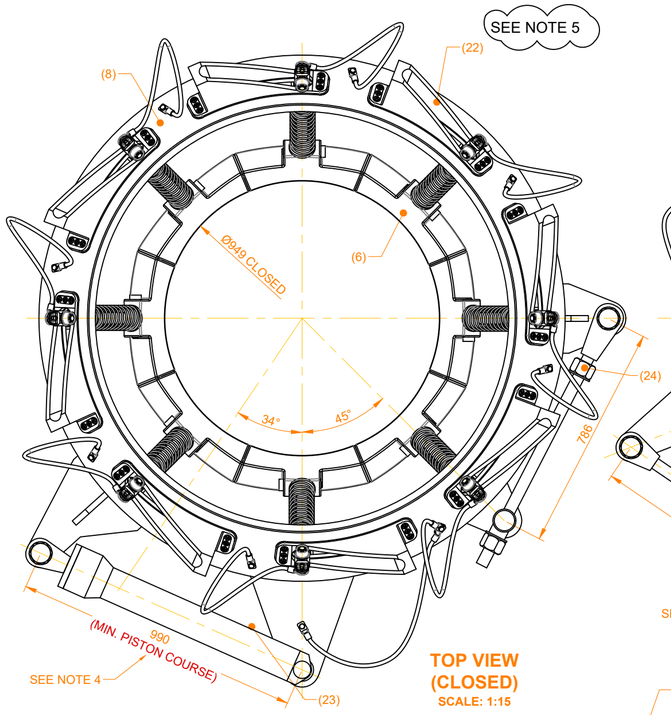

TOP VIEW (CLOSED)
SCALE: 1:15

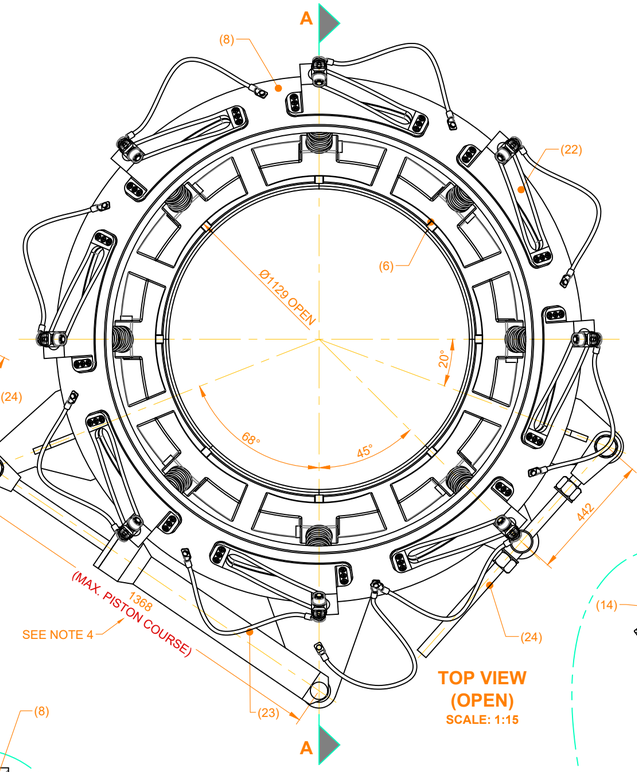

TOP VIEW (OPEN)
SCALE: 1:15

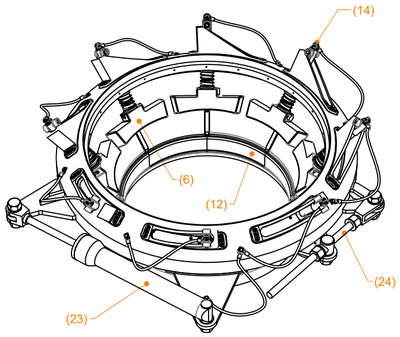

PERSPECTIVE (OPEN)
SCALE: 1:10

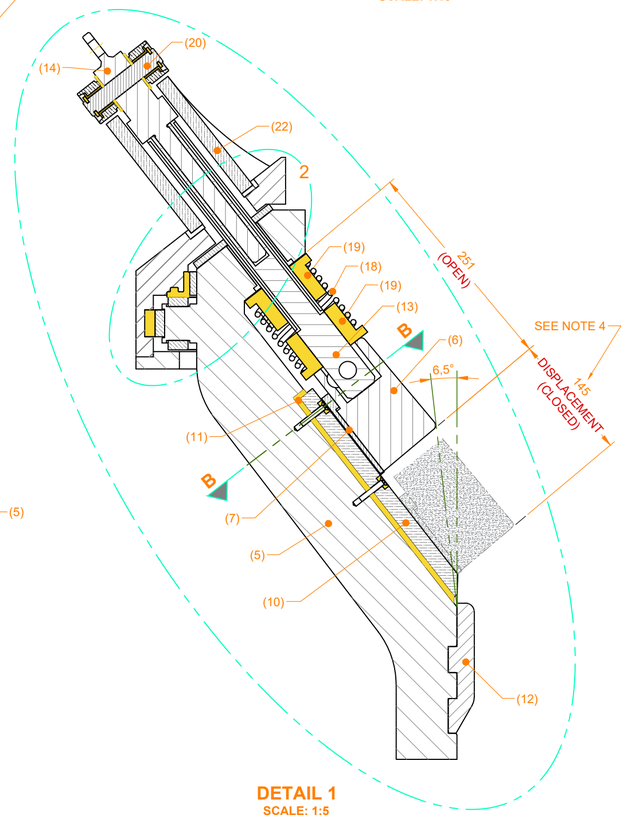

DETAIL 1
SCALE: 1:5

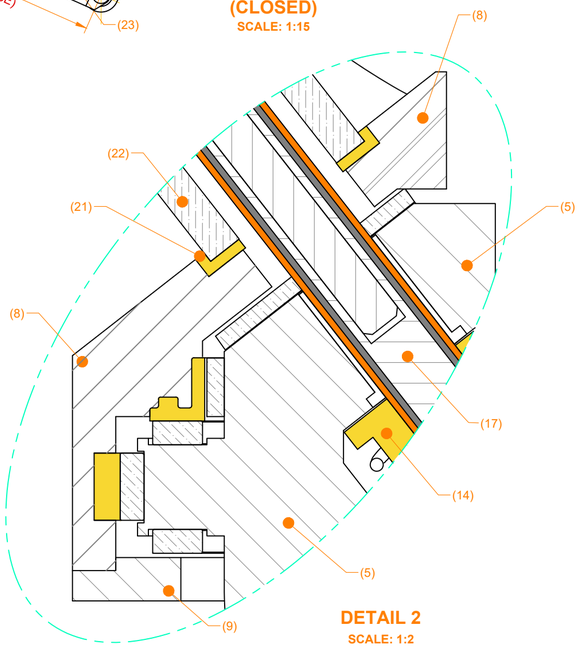

DETAIL 2
SCALE: 1:2

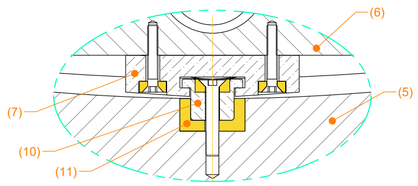

SECTION B-B
SCALE: 1:2

REFERENCE DOCUMENTS

I-LI-3010.00-1300-270-P56-001

GENERAL NOTES

1- SEE PARTS LIST AS REFERENCE.

2- PARTS

UPPER CONE COMPONENTS:

(5) UPPER CONE
(6) LOCKING WEDGE
(7) LOCKING WEDGE GUIDE
(8) DRIVE RING
(9) DRIVE RING FLANGE
(10) GUIDE RAIL
(11) GUIDE RAIL BUSHING
(12) PULL-IN WEAR BUSHING
(13) SHAFT (FEMALE)
(14) SHAFT (MALE)
(15) LOCKING WEDGE PIN
(16) BRACER PIN
(17) SHAFT BUSHING
(18) CONE SPRING
(19) SPRING BUSHING
(20) SHAFT ROLLER
(21) CAM BUSHING
(22) DRIVE RING CAM

UPPER CONE MECHANISM:

(23) UPPER CONE HYDRAULIC CILINDER
(24) ROV TIE BAR

3- ELECTRICAL INSULATION TESTING MUST BE CARRIED OUT AFTER FINAL ASSEMBLY. BRONZE PARTS IN DIRECT CONTACT WITH STEEL MUST BE ELECTRICALLY ISOLATED TO ENSURE BIOCIDE EFFECT.

4- THE LIMIT OF THE LOCKING WEDGES' COURSE IS DEFINED BY THE MAXIMUM DISPLACEMENT OF THE HYDRAULIC CILINDER.

5- UPDATED DRAWING INCLUDING CAM DESIGN (DOUBLE OR SIMPLE CAM) WILL BE ISSUED UNTIL NOTICE TO PROCEED.

FEED DESIGN

B	REVISED WHERE INDICATED	07/02/2025	CX4H	U4B8	NTHF
A	GENERAL REVISION	18/09/2023	RTVH	CX4H	BF6I
0	INITIAL ISSUE	21/07/2022	RTVH	CX4H	U4B8

THE DATA, OR PART THEREOF ARE PETROBRAS PROPERTY AND THUS MUST NOT BE USED IN ANY WAY WITHOUT PERMISSION

PETRÓLEO BRASILEIRO S.A. PETROBRAS

SUB

CLIENT OR USER: E & P

JOB OR PROJECT: FPSO UNIT

AREA OR UNIT: PRODUCTION

TITLE: TSUDL ASSEMBLY

DESIGN	TDUT	DRAWN	RTVH	CHECK	BERK	APPROVAL	BF7F
SCALE	INDIC	SIZE	A2	CC		SHEET	3 of 3
DATE	21/07/2022	No.	I–DE–3010.00–1300–270–P56–003				

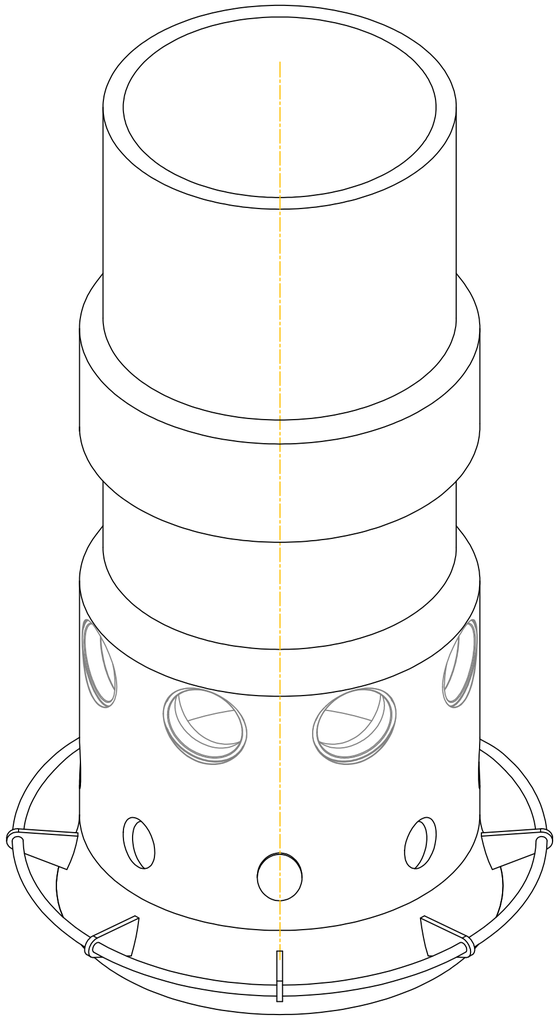

PERSPECTIVE
SCALE: 1:15

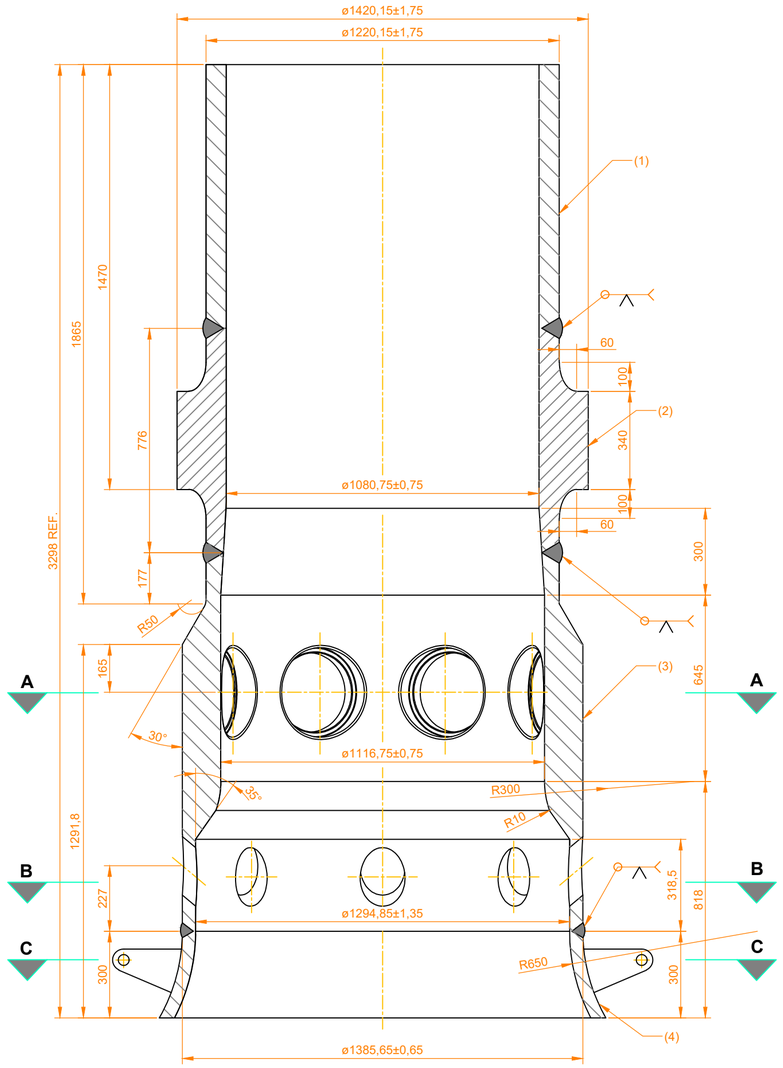

PROFILE SECTION
SCALE: 1:15

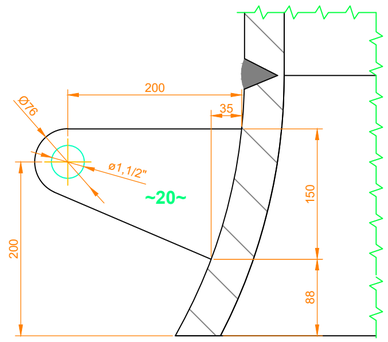

SECTION D-D
SCALE: 1:5

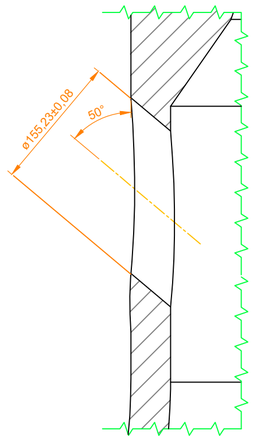

SECTION E-E
SCALE: 1:5

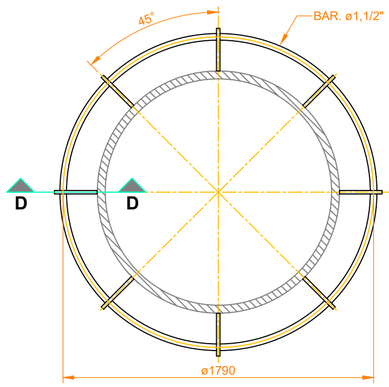

SECTION A-A
SCALE: 1:25

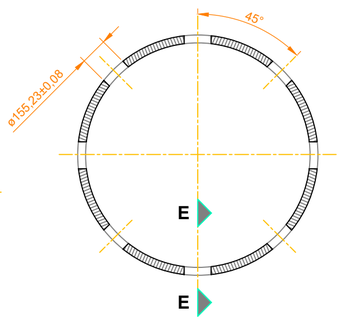

SECTION B-B
SCALE: 1:25

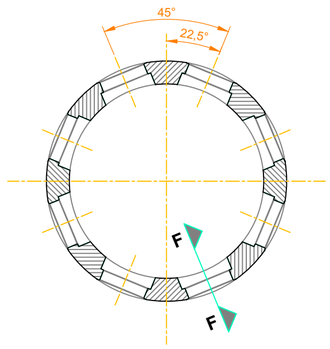

SECTION C-C
SCALE: 1:25

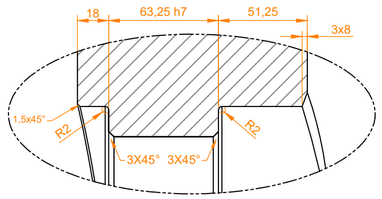

DETAIL 1
SCALE: 1:2

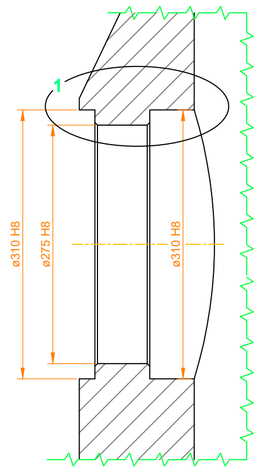

SECTION F-F
SCALE: 1:5

REFERENCE DOCUMENTS

GENERAL NOTES

1- MATERIAL:
(1) ASTM DH 36
(2) DNV RP 0034 SFC3 YIELD STRENGHT 355 MPa
TENSILE STRENGHT 455 MPa
(3) DNV RP 0034 SFC3 YIELD STRENGHT 355 MPa
TENSILE STRENGHT 455 MPa
(4) ASTM DH 36

2- FULL PENETRATION WELD, WITH QUALIFIED PROCEDURE, SHALL BE CONSIDERED FOR EVERY STRUCTURAL WELD. APPROPRIATE NDT SHALL BE PERFORMED IN EVERY JOINTS.

3- WELDS POSITIONS PRESENTED IN DRAWING ARE PRELIMINARY. FINAL POSITION SHALL BE CONFIRMED BY STRUCTURAL CALCULATIONS

4- FINAL REVISION WILL BE ISSUED BY PETROBRAS IN THE NOTICE TO PROCEED

FEED DESIGN

REV.	DESCRIPTION	DATE	EXEC.	CHECK	APPROV.
A	DIMENSIONAL TOLERANCE & MATERIAL EXCHANGE	08/11/2022	TGG6	CX4H	BF6I
0	INITIAL ISSUE	21/07/2022	RTVH	CX4H	U4B8

THE DATA, OR PART THEREOF ARE PETROBRAS PROPERTY AND THUS MUST NOT BE USED IN ANY WAY WITHOUT PERMISSION

PETRÓLEO BRASILEIRO S.A. PETROBRAS

SUB

CLIENT OR USER: **E & P**

JOB OR PROJECT: **FPSO UNIT**

AREA OR UNIT: **PRODUCTION**

TITLE: TSUDL CENTRAL STRUCTURE

DESIGN TDUT	DRAWN RTVH	CHECK BERK	APPROVAL BF7F
SCALE INDIC	SIZE A2	CC	SHEET 1 of 1
DATE 21/07/2022	No. I-DE-3010.00-1300-270-P56-004		

MATERIAL: **SEE GENERAL NOTES**

RUGOSITY (C.L.A): 6,4

SURFACE COATING / TREATMENT

LINEAR DIMENSIONS NOT INDICATED - BOILERMAKING

DIMENSIONS (MM)	DE 2 A ≤30	>30 A ≤120	>120 A ≤400	>400 A ≤1000	>1000 A ≤2000	>2000 A ≤4000	>4000 A ≤8000	>8000 A ≤12000
TOLERANCES	±1	±3	±4	±6	±8	±11	±14	±18

LINEAR DIMENSIONS NOT INDICATED - MACHINING

DIMENSIONS (MM)	DE 0,5 A ≤3	>3 A ≤6	>6 A ≤30	>30 A ≤120	>120 A ≤400	>400 A ≤1000	>1000 A ≤2000	>2000 A ≤4000
LENGHT	±0,2	±0,3	±0,5	±0,8	±1,2	±2,0	±3,0	±4,0
DIAMETER	±0,1	±0,1	±0,2	±0,3	±0,5	±0,8	±1,2	±2,0

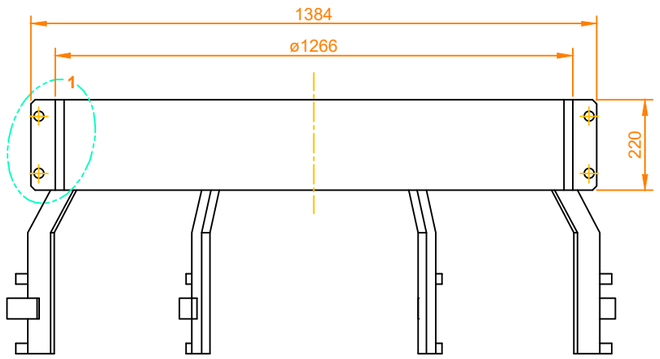

FRONT VIEW
SCALE: 1:15

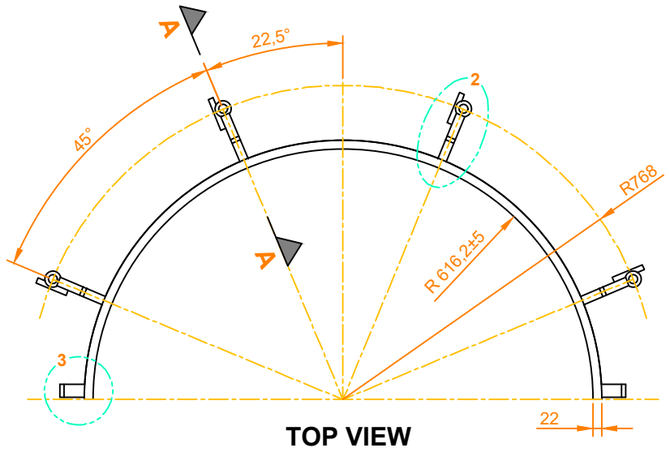

TOP VIEW
SCALE: 1:15

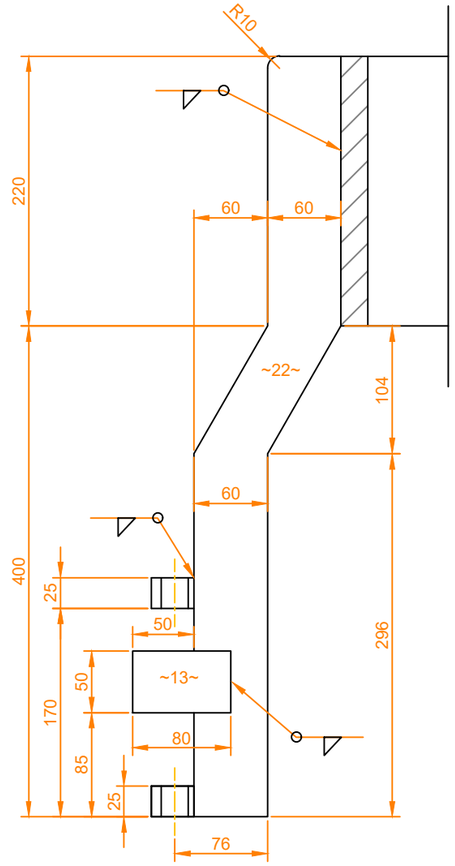

SECTION A-A
SCALE: 1:5

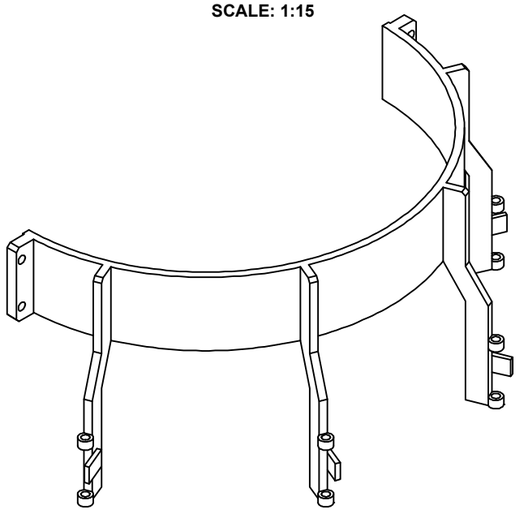

PERSPECTIVE
SCALE: 1:15

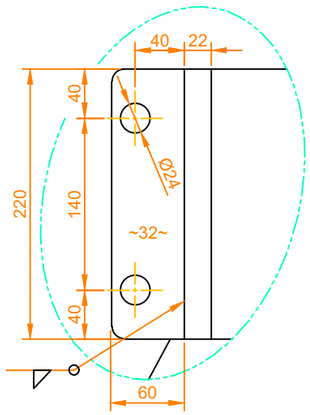

DETAIL 1
SCALE: 1:5

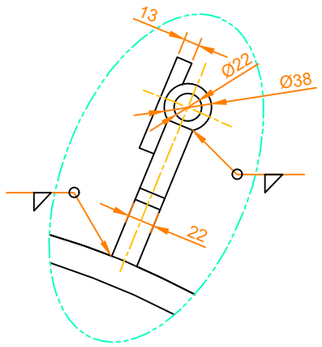

DETAIL 2
SCALE: 1:5

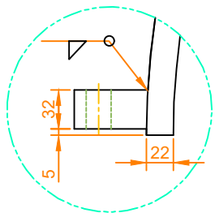

DETAIL 3
SCALE: 1:5

MATERIAL	WEIGHT	RUGOSITY (RA)
ASTM DH 36		

LINEAR DIMENSIONS NOT INDICATED - BOILERMAKING

DIMENSIONS (MM)	DE 2 A ≤30	>30 A ≤120	>120 A ≤400	>400 A ≤1000	>1000 A ≤2000	>2000 A ≤4000	>4000 A ≤8000	>8000 A ≤12000
TOLERANCES	±1	±3	±4	±6	±8	±11	±14	±18

SURFACE COATING	ANTIFOULING
TREATMENT	

LINEAR DIMENSIONS NOT INDICATED - MACHINING

DIMENSIONS (MM)	DE 0,5 A ≤3	>3 A ≤6	>6 A ≤30	>30 A ≤120	>120 A ≤400	>400 A ≤1000	>1000 A ≤2000	>2000 A ≤4000
LENGHT	±0,2	±0,3	±0,5	±0,8	±1,2	±2,0	±3,0	±4,0
DIAMETER	±0,1	±0,1	±0,2	±0,3	±0,5	±0,8	±1,2	±2,0

REFERENCE DOCUMENTS

GENERAL NOTES

FEED DESIGN

REV.	DESCRIPTION	DATE	EXEC.	CHECK	APPROV.
0	INITIAL ISSUE	21/07/2022	RTVH	CX4H	U4B8

THE DATA, OR PART THEREOF ARE PETROBRAS PROPERTY AND THUS MUST NOT BE USED IN ANY WAY WITHOUT PERMISSION

PETROLEO BRASILEIRO S.A. PETROBRAS — CENPES

CLIENT OR USER	E & P
JOB OR PROJECT	FPSO UNIT
AREA OR UNIT	PRODUCTION
TITLE	TSUDL BRACER

DESIGN	TDUT	DRAWN	RTVH	CHECK	BERK
APPROV.	BF7F	SIZE	A3	CC	
DATE	21/07/2022	SCALE	INDIC.	SHEET	1 of 1

No. I-DE-3010.00-1300-270-P56-005

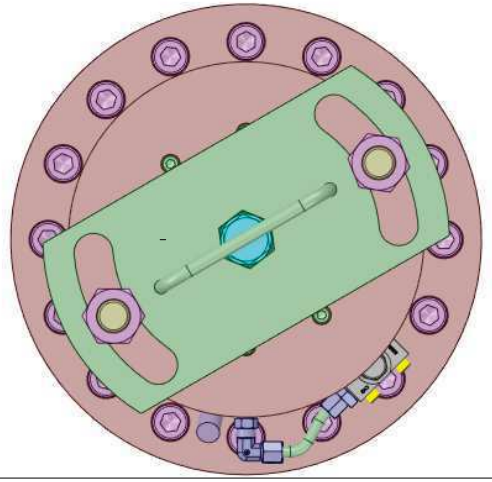

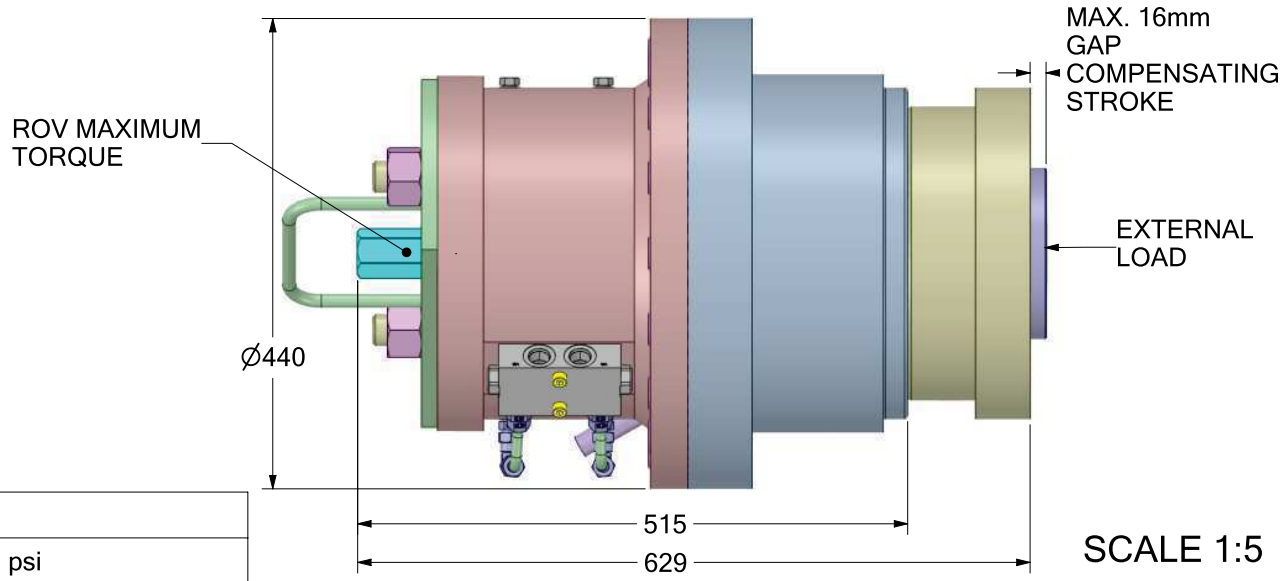

SCALE 1:5

MTL DATA SHEET	
MAXIMUM HYDRALIC PRESSURE	5000 psi
MAXIMUM ADVANCE PISTON LOAD FOR LOCKING	1286 kN
MAXIMUM ROV DESING TORQUE (API6A μ=0,13, 83%Sy)	5141 Nm
MAXIMUM PISTON STROKE (A)	40 mm
LOCKING STROKE (L)	24 mm
MAXIMUM GAP ELIMINATING STROKE (G) < (A) - (L)	16 mm
WEIGHT IN AIR	305 kg
HEAD EXTERNAL LOAD (SEE NOTE ON PAGE 2) AND MTL HYDRAULIC ACTUATED	EXTREME CENTENARY
MAX. MTL EXTERNAL LOAD MECHANICAL ACTUATED	ACCIDENTAL

FEED DRAWING

CHANGES ARE HIGHLIGHTED WITH RED COLOR AND BALLOON.

PREVIOUS ACCEPTED DETAILED DESIGN AND QUALIFICATION TESTS ARE CONSIDERED ACCEPTED FOR THIS MTL DRAWING REVISION WITH NO REQUIREMENTS FOR ADDITIONAL TESTS.

NOTES:
1- THIS DRAWING WAS PREPARED BY PETROBRAS FOR THE PURPOSE TO PROVIDE THE CONTRACTOR ENOUGH INFORMATION FOR A FEASIBLE TECHNICAL PROPOSAL.
2-IT IS CONTRACTOR'S AND SUPPLIER'S RESPONSABILITY TO PERFORM ITS OWN DESIGN DETAILING, VERIFICATION, IMPROVEMENTS AND/OR PROPOSE ALTERNATIVES BASED ON ITS TECHNICAL EXPERIENCE, ENGINEERING JUDGMENT AS WELL AS TO CHECK AND CORRECT ANY INCONSISTENCY OR ERROR DUE TO ITS PRELIMINARY DESIGN STAGE.

REFERENCE DOCUMENTS
I-ET-3010.00-1519-140-P56-001 - UNIFIED DIVERLESS SUPPORT TUBE
I-LI-3010.00-1300-270-P56-001 - UNIFIED DIVERLESS SUPPORT TUBE - TSUDL
I-ET-3010.00-1300-850-PEK-003 - MTL MATERIAL SPECIFICATION

	REV. 0	REV. A	REV. B	REV. C	REV. D	REV. E	REV. F	REV. G	REV. H	REV. J	REV. K
DATE	23/12/21	30/06/23	24/05/24								
DESIGN	PSUB	PSUB	PSUB								
EXECUTION	CX4H	CX4H	CX4H								
CHECK	CJLZ	U4B8	EVJN								
APPROVAL	BEII	BF6I	BF6I								

PETROBRAS

DRAWING Nº: I-DE-3010.00-1300-270-P56-001

CLIENT: BÚZIOS — SHEET: 1 of 26

JOB: TSUDL — CC:

AREA: BÚZIOS

TITLE: LATERAL SUPPORT MODULE - MTL — INTERNO — SUB/ES/PSUB

FORM OWNED TO PETROBRAS NI-0381 REV. L

INFORMATION IN THIS DOCUMENT IS PROPERTY OF PETROBRAS, BEING PROHIBITED OUTSIDE OF THEIR PURPOSE

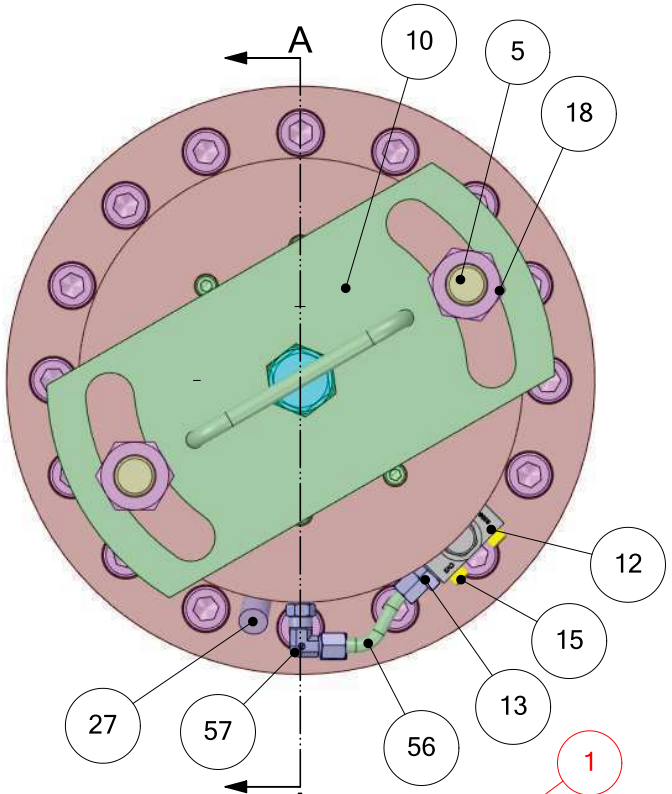

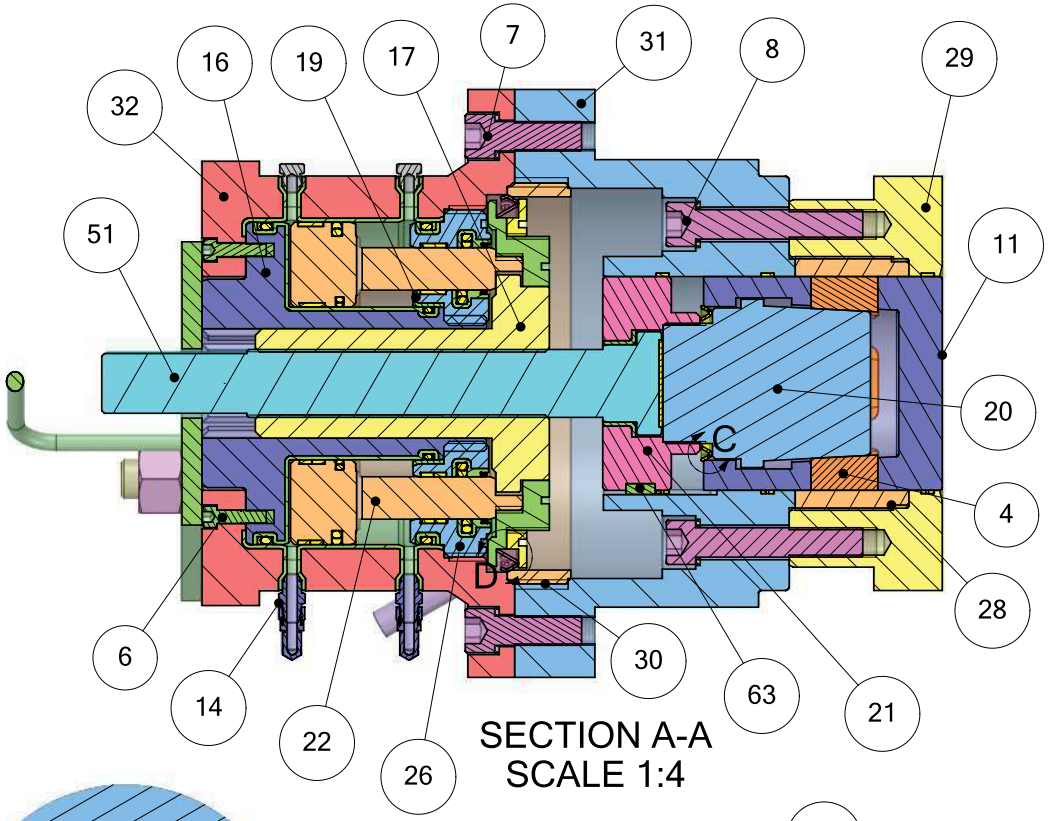

SECTION A-A
SCALE 1:4

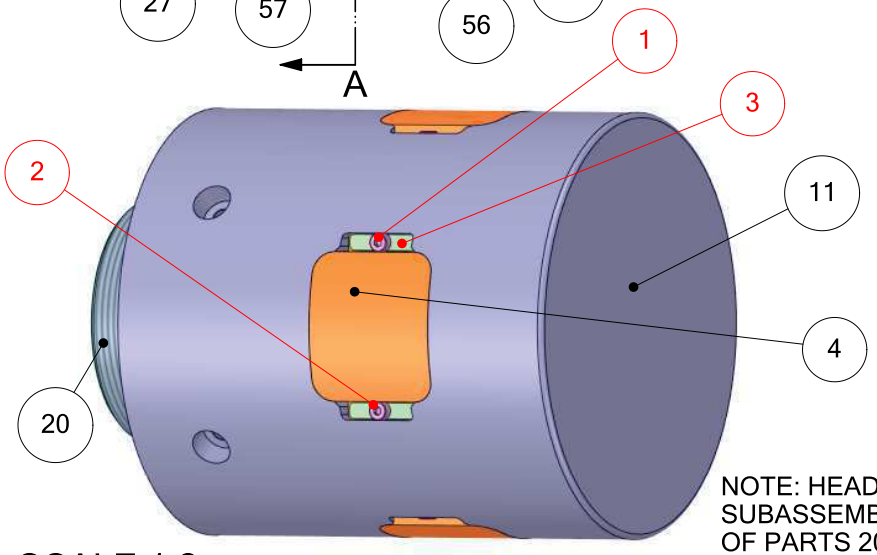

SCALE 1:2

NOTE: HEAD IS THE SUBASSEMBLY OF PARTS 20, 4, 28,11.

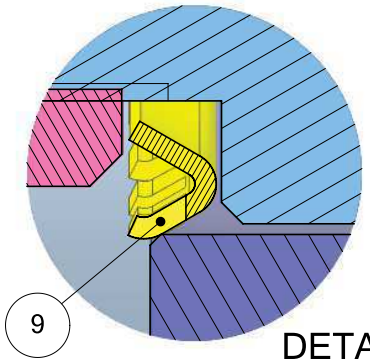

DETAIL C
SCALE 2:1

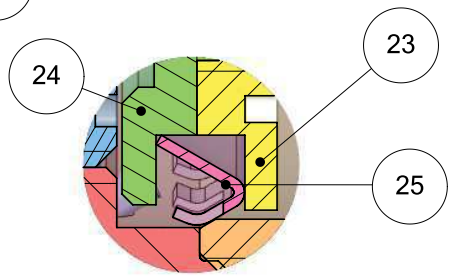

DETAIL D
SCALE 1:1

FEED DRAWING

	REV. 0	REV. A	REV. B	REV. C	REV. D	REV. E	REV. F	REV. G	REV. H	REV. J	REV. K
DATE	23/12/21	30/06/23	24/05/24								
DESIGN	PSUB	PSUB	PSUB								
EXECUTION	CX4H	CX4H	CX4H								
CHECK	CJLZ	U4B8	EVJN								
APPROVAL	BEII	BF6I	BF6I								

PETROBRAS

DRAWING Nº: I-DE-3010.00-1300-270-P56-001

CLIENT: BÚZIOS

SHEET: 2 of 26

JOB: TSUDL

CC:

AREA: BÚZIOS

TITLE: LATERAL SUPPORT MODULE - MTL

INTERNO

SUB/ES/PSUB

FORM OWNED TO PETROBRAS NI-0381 REV. L

INFORMATION IN THIS DOCUMENT IS PROPERTY OF PETROBRAS, BEING PROHIBITED OUTSIDE OF THEIR PURPOSE

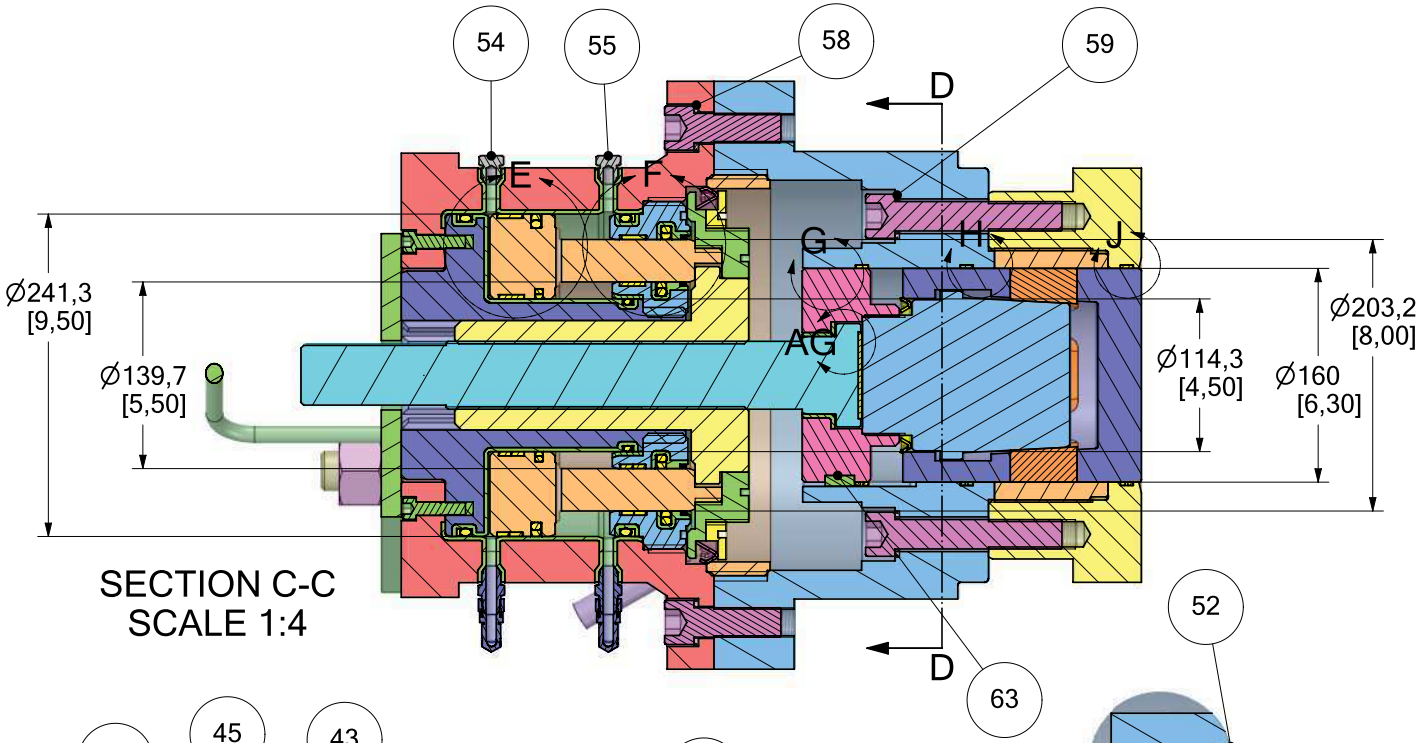

SECTION C-C
SCALE 1:4

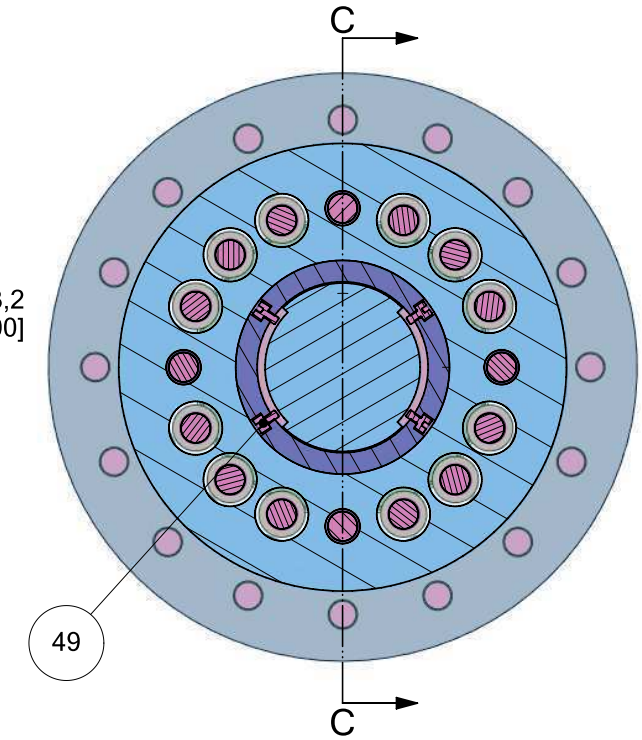

SECTION D-D

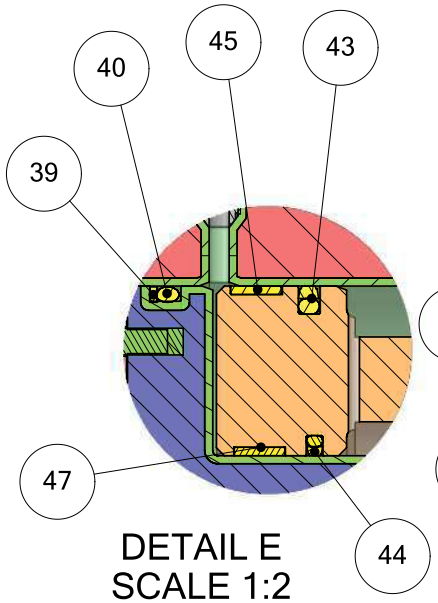

DETAIL E
SCALE 1:2

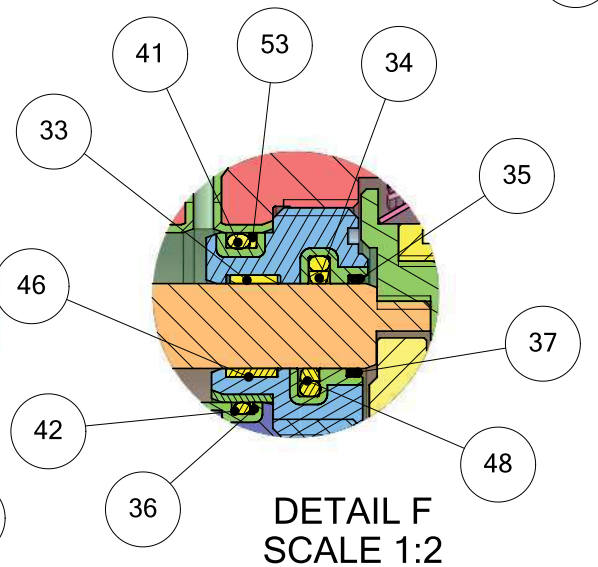

DETAIL F
SCALE 1:2

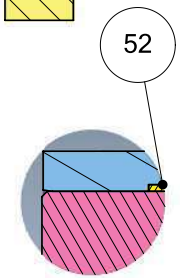

DETAIL G
SCALE 1:2

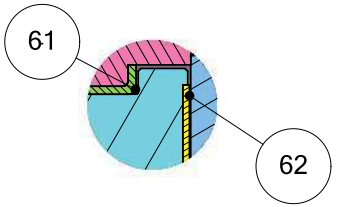

DETAIL AG
SCALE 1:2

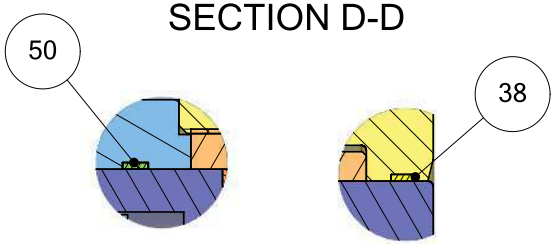

DETAIL H
SCALE 1:2

DETAIL J
SCALE 1:2

FEED DRAWING

	REV. 0	REV. A	REV. B	REV. C	REV. D	REV. E	REV. F	REV. G	REV. H	REV. J	REV. K
DATE	23/12/21	30/06/23	24/05/24								
DESIGN	PSUB	PSUB	PSUB								
EXECUTION	CX4H	CX4H	CX4H								
CHECK	CZLZ	U4B8	EVJN								
APPROVAL	BEII	BF6I	BF6I								

PETROBRAS

DRAWING Nº: I-DE-3010.00-1300-270-P56-001

CLIENT: BÚZIOS — SHEET: 3 of 26

JOB: TSUDL — CC:

AREA: BÚZIOS

TITLE: LATERAL SUPPORT MODULE - MTL — INTERNO — SUB/ES/PSUB

FORM OWNED TO PETROBRAS NI-0381 REV. L

INFORMATION IN THIS DOCUMENT IS PROPERTY OF PETROBRAS, BEING PROHIBITED OUTSIDE OF THEIR PURPOSE

PN	DESCRIPTION	QTD	SPECIFICATION / REFERENCE	SHEET
1	SOCKET HEAD BOLT ISO_4762-M4x10	4	UNS C17200 - SEE NOTE 1	2
2	SOCKET HEAD BOLT ISO_4762-M4x10	4	UNS C17200 - SEE NOTE 1	2
3	PLATE SPRING	8	UNS C17200 - SEE NOTE 1	24
4	SHOES	4	UNS C17200 - SEE NOTE 1	8
5	TORQUE WRENCH REACTION STUD	2	I-ET-3000.00-1500-251-PEK-001	2
6	SOCKET HEAD BOLT M10	8	I-ET-3000.00-1500-251-PEK-001	2
7	SOCKET HEAD BOLT M22x1,5 x 65	16	I-ET-3000.00-1500-251-PEK-001	2
8	SOCKET HEAD BOLT M22x1,5 x 125	16	I-ET-3000.00-1500-251-PEK-001	2
9	SLOTTED DISK SPRING	1	UNS C17200 - SEE NOTE 1	10
10	ANTI ROTATION PLATE	1	A36	2
11	CAGE	1	UNS C17200 - SEE NOTE 1	7
12	DUAL PILOT OPERATED CHECK VALVE	1	CDPH103A65N-8T	26
13	FITTING SAE ORB -8 / JIC 37-TUBE 10mm	2	SUPER DUPLEX 2507	2
14	FITTING MALE JIC 37-TUBE 10mm / JIC 37-TUBE 10mm	2	SUPER DUPLEX 2507	2
15	SOCKET HEAD BOLT ISO_4762-M8x45	4	I-ET-3000.00-1500-251-PEK-001	2
16	CYLINDER INTERNAL TUBE WITH 625 WELD OVERLAY	1	AISI 4130	16
17	SLIDING SLEEVE	1	UNS C95500 HT	11
18	HEAVY HEX NUT 8-UN 1 ¼ ANSI B18.2.2	2	I-ET-3000.00-1500-251-PEK-001	2
19	INTERNAL CAP	1	AISI 4130	20
20	MANDREL	1	UNS C17200 - SEE NOTE 1	6
21	RETAINER NUT	1	UNS C17200 - SEE NOTE 1	21
22	PISTON	1	UNS C17200 - SEE NOTE 1	12
23	SPRING HOLDER CAP	1	UNS S31266	23
24	SPRING HOLDER	1	UNS S31266	22
25	SLOTTED DISK SPRING	1	UNS C17200 - SEE NOTE 1	13
26	EXTERNAL CAP	1	AISI 4130	19
27	SUB SEA SWITCH	1	HYDRACON 1812-100	2
28	LOAD RING LINER	1	UNS C17200 - SEE NOTE 1	9
29	LOAD RING	1	ASTM A320 gr L7	5
30	PLATE LINER	1	UNS C17200 - SEE NOTE 1	15
31	MOUTING PLATE	1	AISI 4130	14
32	CILINDER EXTERNAL TUBE WITH 625 WELD OVERLAY	1	AISI 4130	17 / 18
33	8x8,25x0,76 ROD WEAR RING	1	GR2E08000-C380	3
34	8" ROD 5000PSI PTFE FACED ELASTOMER-ENERGIZED SEAL	1	RT1408000-M12N	3
35	8" ROD LIP SEAL SCRAPER	1	RVCCNB266-Z80HM	3

PN	DESCRIPTION	QTD	SPECIFICATION / REFERENCE	SHEET
36	346 BACKUP RING	1	N1444-90	3
37	5,5" PISTON LIP SEAL SCRAPER	1	PVCCNB250-Z80HM	3
38	160x180x185x9,7 ROD WEAR RING	1	GR6901600-C380	3
39	447 BACKUP RING	1	N1444-90	3
40	2-447 O' RING	1	2-447 N1059-90 (NBR 90SH)	3
41	2-447 O' RING	1	2-447 N1059-90 (NBR 90SH)	3
42	2-346 O' RING	1	2-346 N1059-90 (NBR 90SH)	3
43	9,5" PISTON 5000PSI PTFE FACED ELASTOMER-ENERGIZED SEAL	1	PT1409500-M12N	3
44	4,5" ROD 5000PSI PTFE FACED ELASTOMER-ENERGIZED SEAL	1	RT1304500-M12N	3
45	9,5x9,25x0,76 PISTON WEAR RING	1	GP2C09500-C380	3
46	5,5x5x0,76 PISTON WEAR RING	1	GP2E05500-C380	3
47	4,5x4,75x0,76 ROD WEAR RING	1	GR2E04500-C380	3
48	5,5" PISTON 5000PSI PTFE FACED ELASTOMER-ENERGIZED SEAL	1	PT1405500-M12N	3
49	SOCKET HEAD BOLT ISO 4762 M8X10	4	UNS C17200 SEE NOTE 1	3
50	160x180x185x9,7 ROD WEAR RING	1	GR6901600-C380	3
51	DRIVING BOLT	1	UNS N06686 - 105KSI	25
52	160x180x185x9,7 ROD WEAR RING	1	GR6901600-C380	3
53	447 BACKUP RING	1	N1444-90	3
54	PLUG JIC 37 - 3/8	1	SUPER DUPLEX 2507	26
55	PLUG JIC 37 - 3/8	1	SUPER DUPLEX 2507	26
56	TUBING OD 10mm x ESP. 1mm	2	SUPER DUPLEX 2507	26
57	ELBOW FEMALE SWIVEL JIC 37 10mm x JIC 37 10mm	2	SUPER DUPLEX 2507	2
58	WEDGE LOCKING WASHER	16	EN 1.4547	3
59	WEDGE LOCKING WASHER	16	EN 1.4547	3
60	PRESSURE RELIEF VALVE	2	TO BE DEFINED	
61	SELF LUBRICATING BEARING	1	POLYAMIDE 6.6	24
62	THRUST WASHER	1	SELF-LUBRICATING FIBER REINFORCED COMPOSITE W/ MIN. 415 MPa STATIC LOAD (REF. HSG COMPOSITE OR SIMILAR)	24
63	PARALLEL KEY DIN 6885 10x8x22	1	INOX STEEL 1.4571	24

NOTE 1 - UNS 17200 WITH TEMPER REQUIRED TO ACHIEVE FOLLOWING PROPERTIES:
Yield Strength > 758 MPa ; Ultimate Tensile Strength > 965 MPa ; Elongation > 10% ;
Hardness > 26 HRC < 35 HRC ; CVN Impact Strength > 15 J at 23°C

AISI 4130 Quenched and Tempered
Maximum Hardness 32 HRC Minimum Hardness 26 HRC ;
Minimum Yield Strength: 725 MPa
Minimum Ultimate Tensile Strength: 860 Mpa

FEED DRAWING

	REV. 0	REV. A	REV. B	REV. C	REV. D	REV. E	REV. F	REV. G	REV. H	REV. J	REV. K
DATE	23/12/21	30/06/23	24/05/24								
DESIGN	PSUB	PSUB	PSUB								
EXECUTION	CX4H	CX4H	CX4H								
CHECK	CJLZ	U4B8	EVJN								
APPROVAL	BEII	BF6I	BF6I								

PETROBRAS

DRAWING Nº: I-DE-3010.00-1300-270-P56-001

CLIENT: BÚZIOS SHEET: 4 of 26

JOB: TSUDL CC:

AREA: BÚZIOS

TITLE: LATERAL SUPPORT MODULE - MTL

INTERNO

SUB/ES/PSUB

INFORMATION IN THIS DOCUMENT IS PROPERTY OF PETROBRAS, BEING PROHIBITED OUTSIDE OF THEIR PURPOSE

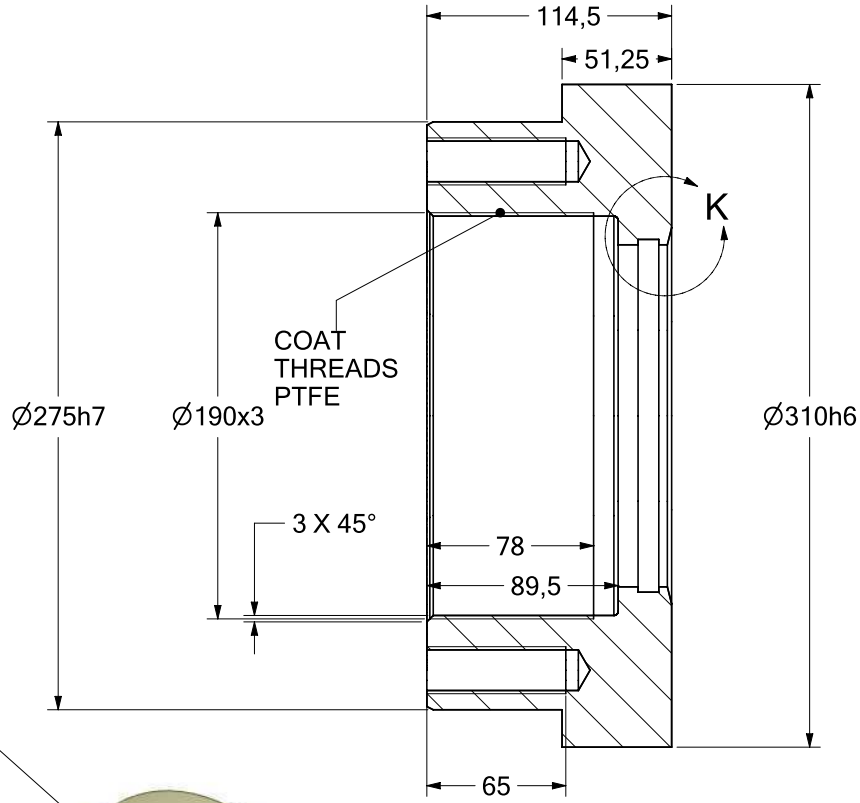

SECTION E-E
SCALE 2:5

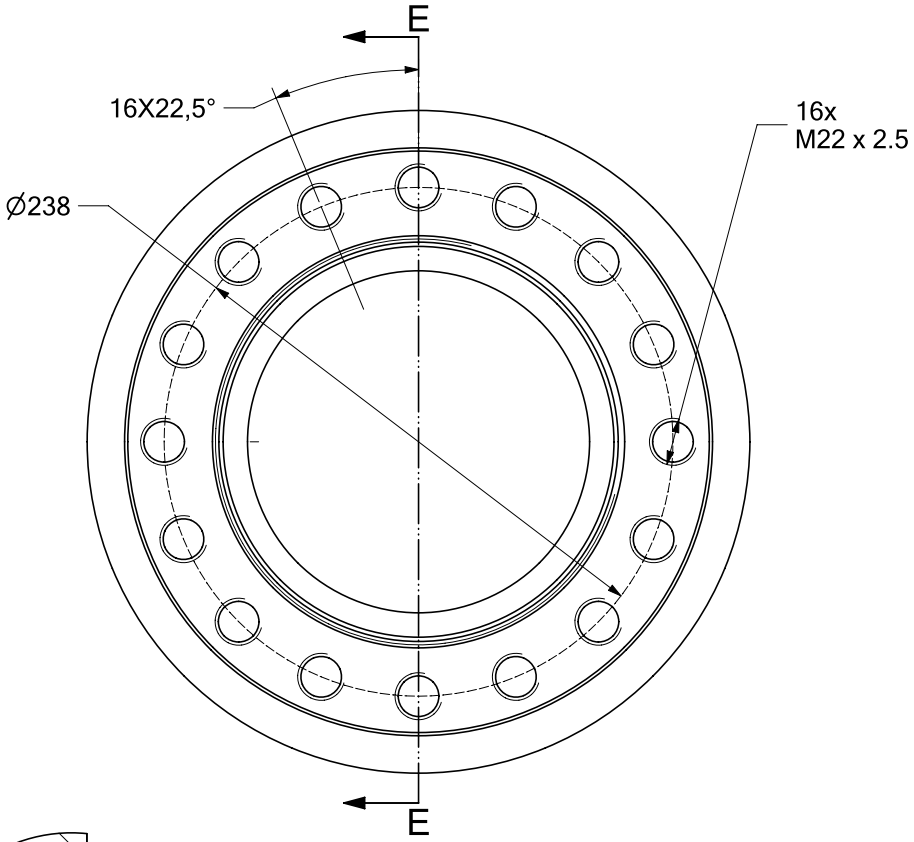

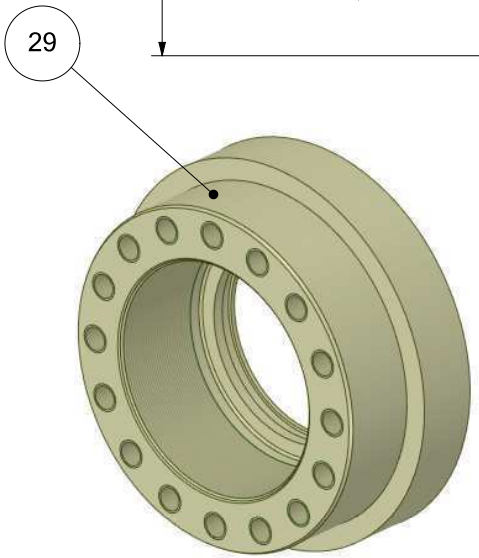

SCALE 1:4

FEED DRAWING

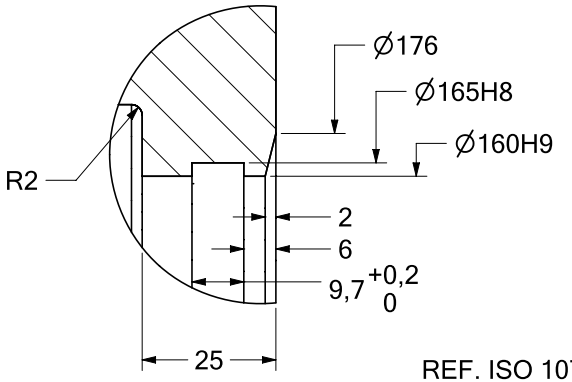

DETAIL K
SCALE 1:1

REF. ISO 10766

GENERAL NOTE:
NON SPECIFIED
TOLERANCES (mm):
X. ± 1mm
ANGULAR ± 0° 15'
0.X ± 0,3 mm
0.XX ± 0,1 mm

	REV. 0	REV. A	REV. B	REV. C	REV. D	REV. E	REV. F	REV. G	REV. H	REV. J	REV. K
DATE	23/12/21	30/06/23	24/05/24								
DESIGN	PSUB	PSUB	PSUB								
EXECUTION	CX4H	CX4H	CX4H								
CHECK	CJLZ	U4B8	EVJN								
APPROVAL	BEII	BF6I	BF6I								

PETROBRAS

DRAWING Nº: I-DE-3010.00-1300-270-P56-001

CLIENT: BÚZIOS

SHEET: 5 of 26

JOB: TSUDL

CC:

AREA: BÚZIOS

TITLE: LATERAL SUPPORT MODULE - MTL

INTERNO

SUB/ES/PSUB

FORM OWNED TO PETROBRAS NI-0381 REV. L

INFORMATION IN THIS DOCUMENT IS PROPERTY OF PETROBRAS, BEING PROHIBITED OUTSIDE OF THEIR PURPOSE

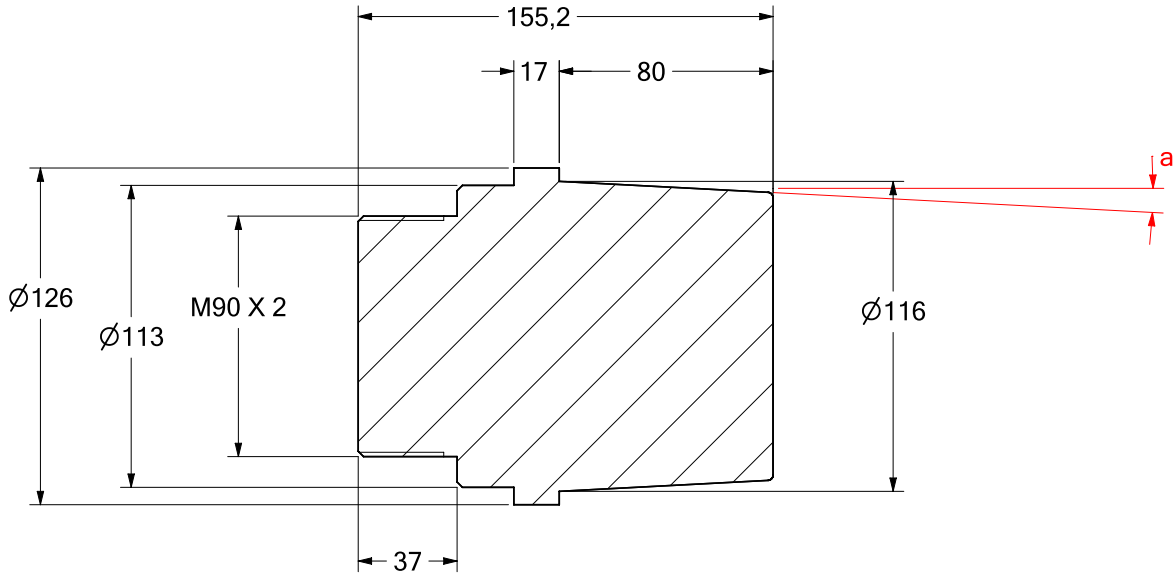

SECTION F-F
SCALE 1:2

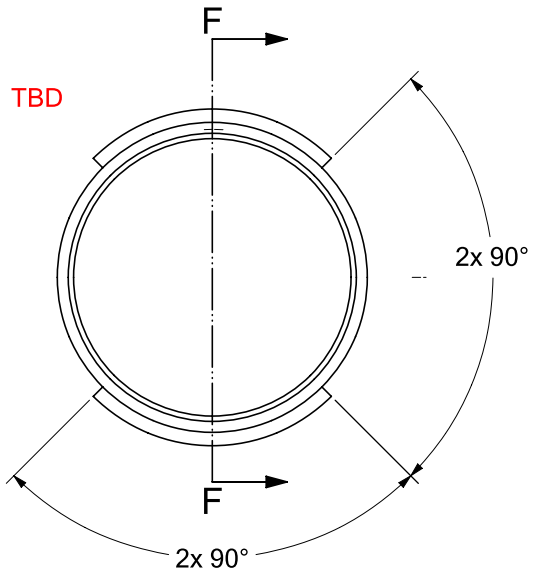

GENERAL NOTE:
NON SPECIFIED
TOLERANCES (mm):
X. ± 1mm
ANGULAR ± 0° 15'
0.X ± 0,3 mm
0.XX ± 0,1 mm

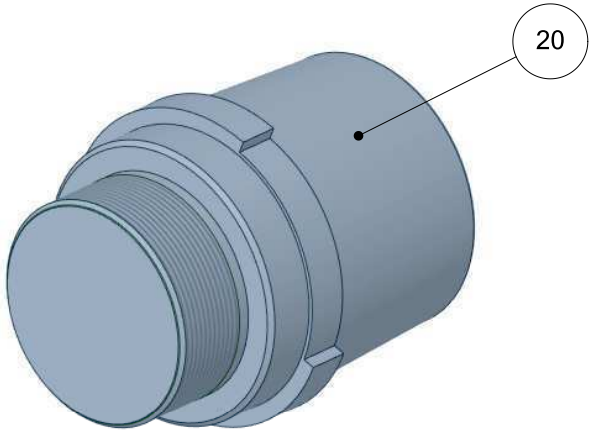

SCALE 1:2

NOTE 1 - angle "a" to BE DEFINED ACC. TO TESTS IN THE RANGE OF 1° TO 3,5°

FEED DRAWING

	REV. 0	REV. A	REV. B	REV. C	REV. D	REV. E	REV. F	REV. G	REV. H	REV. J	REV. K
DATE	23/12/21	30/06/23	24/05/24								
DESIGN	PSUB	PSUB	PSUB								
EXECUTION	CX4H	CX4H	CX4H								
CHECK	CJLZ	U4B8	EVJN								
APPROVAL	BEII	BF6I	BF6I								

PETROBRAS

DRAWING		Nº:	I-DE-3010.00-1300-270-P56-001
CLIENT:	BÚZIOS	SHEET:	6 of 26
JOB:	TSUDL	CC:	
AREA:	BÚZIOS		
TITLE:	LATERAL SUPPORT MODULE - MTL		INTERNO
			SUB/ES/PSUB

FORM OWNED TO PETROBRAS NI-0381 REV. L

INFORMATION IN THIS DOCUMENT IS PROPERTY OF PETROBRAS, BEING PROHIBITED OUTSIDE OF THEIR PURPOSE

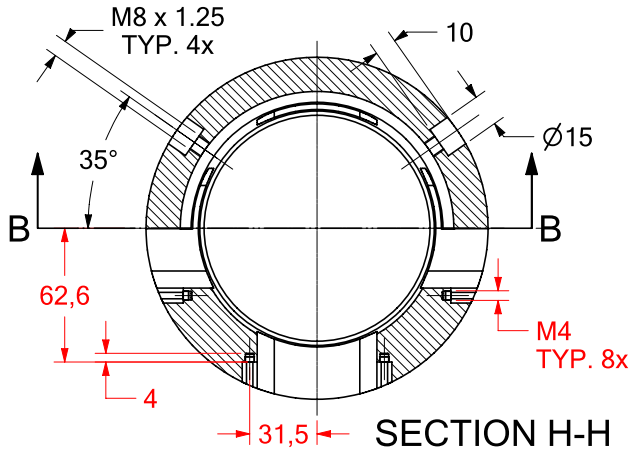

SECTION H-H

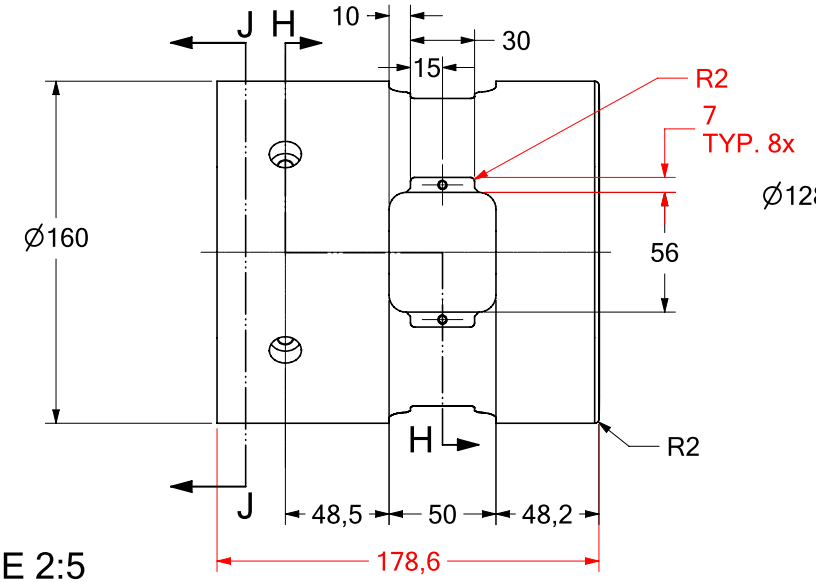

SCALE 2:5

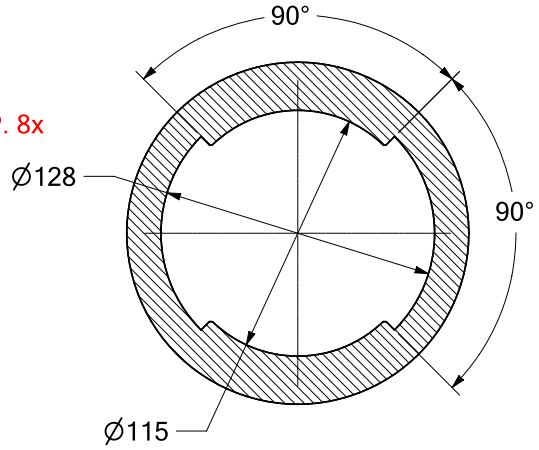

SECTION J-J

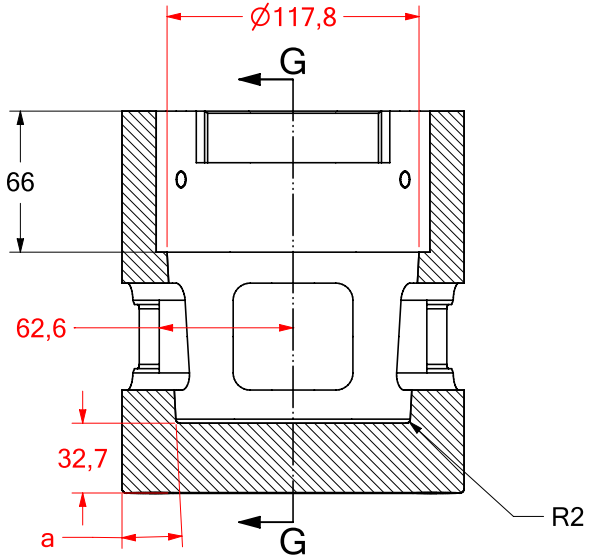

SECTION B-B

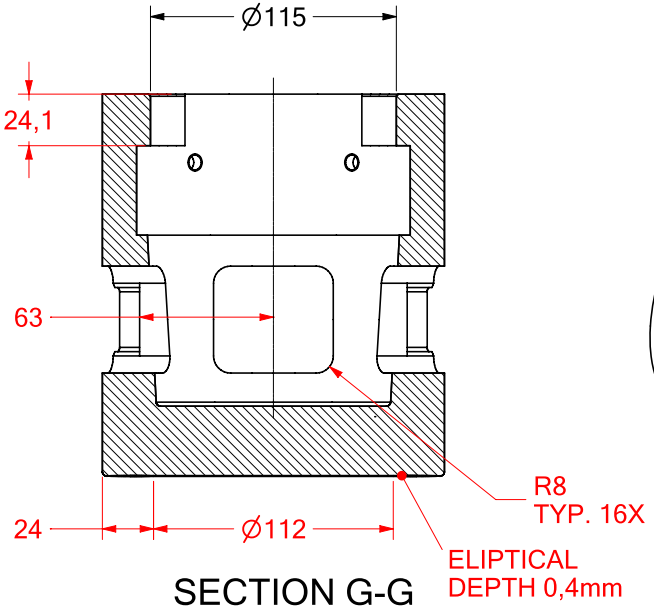

SECTION G-G

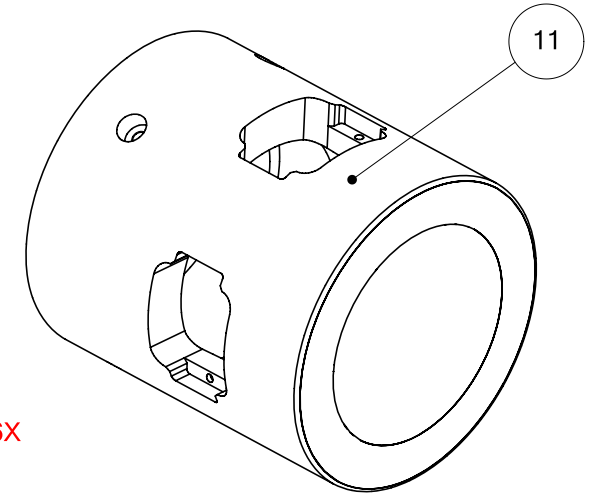

SCALE 2:5

NOTE 1 - ANGLE "a" TO BE DEFINED ACC. TO TESTS IN THE RANGE OF 1° TO 3,5°. SEE SHEETS 6 AND 8.

GENERAL NOTE:
NON SPECIFIED TOLERANCES (mm):
X. ± 1mm ANGULAR ± 0° 15'
0.X ± 0,3 mm 0.XX ± 0,1 mm

	REV. 0	REV. A	REV. B	REV. C	REV. D	REV. E	REV. F	REV. G	REV. H	REV. J	REV. K
DATE	23/12/21	30/06/23	24/05/24								
DESIGN	PSUB	PSUB	PSUB								
EXECUTION	CX4H	CX4H	CX4H								
CHECK	CJLZ	U4B8	EVJN								
APPROVAL	BEII	BF6I	BF6I								

BR PETROBRAS

DRAWING Nº: I-DE-3010.00-1300-270-P56-001
CLIENT: BÚZIOS
SHEET: 7 of 26
JOB: TSUDL
CC:
AREA: BÚZIOS
TITLE: LATERAL SUPPORT MODULE - MTL
INTERNO
SUB/ES/PSUB

FORM OWNED TO PETROBRAS NI-0381 REV. L
INFORMATION IN THIS DOCUMENT IS PROPERTY OF PETROBRAS, BEING PROHIBITED OUTSIDE OF THEIR PURPOSE

NOTE 1 - ANGLE "a" TO BE DEFINED ACC.
TO TESTS IN THE RANGE OF 1° TO 3,5°.
SEE SHEETS 6 AND 7.

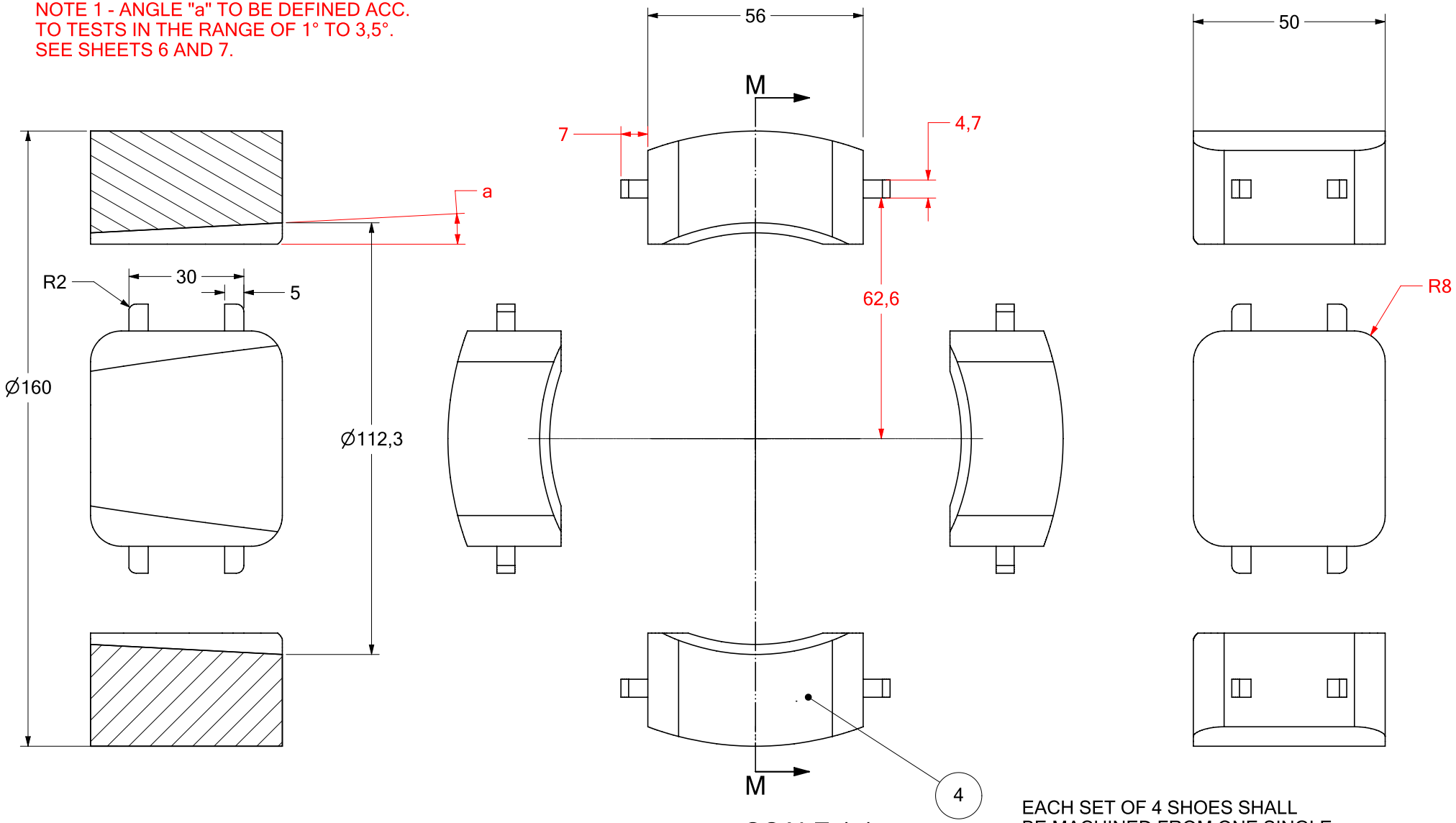

SCALE 1:1

EACH SET OF 4 SHOES SHALL
BE MACHINED FROM ONE SINGLE
PART TO GARANTEE CONCENTRICITY.

SECTION M-M

GENERAL NOTE:
NON SPECIFIED TOLERANCES (mm):
X. ± 1mm ANGULAR ± 0° 15'
0.X ± 0,3 mm 0.XX ± 0,1 mm

	REV. 0	REV. A	REV. B	REV. C	REV. D	REV. E	REV. F	REV. G	REV. H	REV. J	REV. K
DATE	23/12/21	30/06/23	24/05/24								
DESIGN	PSUB	PSUB	PSUB								
EXECUTION	CX4H	CX4H	CX4H								
CHECK	CJLZ	U4B8	EVJN								
APPROVAL	BEII	BF6I	BF6I								

PETROBRAS

DRAWING Nº: I-DE-3010.00-1300-270-P56-001
CLIENT: BÚZIOS
SHEET: 8 of 26
JOB: TSUDL
CC:
AREA: BÚZIOS
TITLE: LATERAL SUPPORT MODULE - MTL
INTERNO
SUB/ES/PSUB

FORM OWNED TO PETROBRAS NI-0381 REV. L
INFORMATION IN THIS DOCUMENT IS PROPERTY OF PETROBRAS, BEING PROHIBITED OUTSIDE OF THEIR PURPOSE

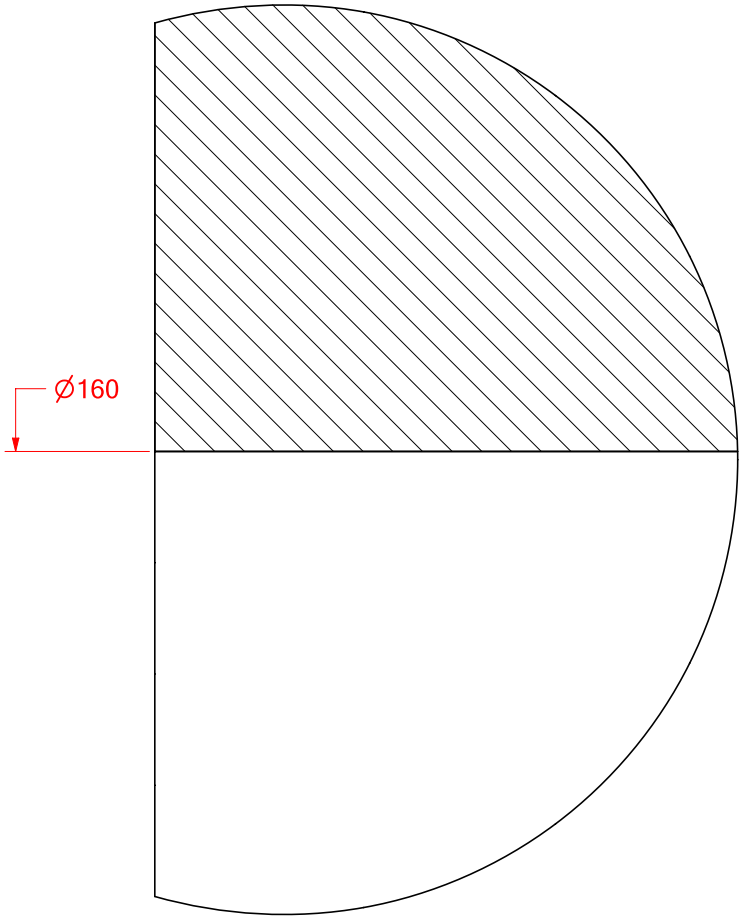

DETAIL M
SCALE 10:1

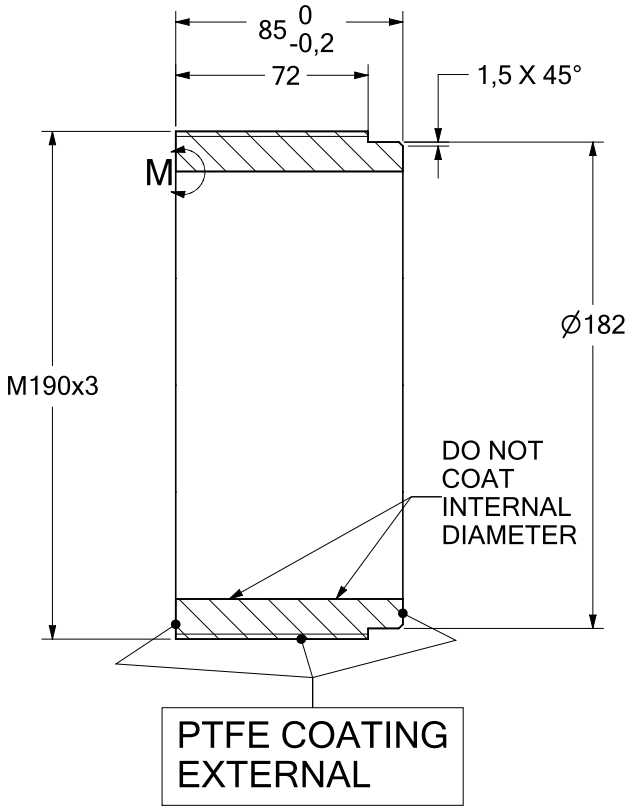

SECTION N-N
SCALE 1:2

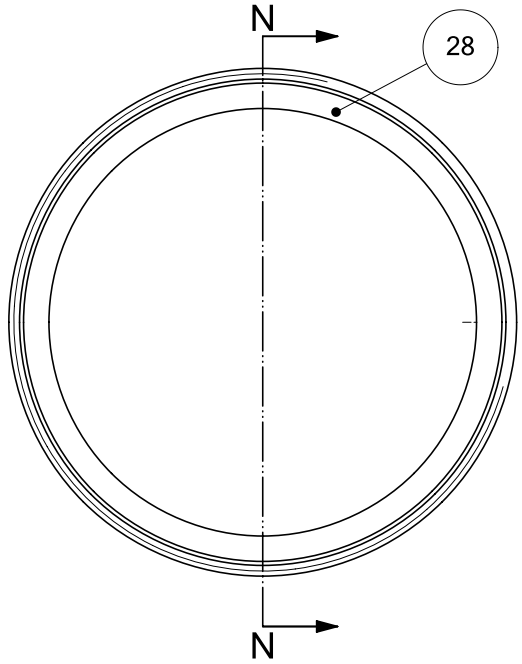

GENERAL NOTE:
NON SPECIFIED
TOLERANCES (mm):
X. ± 1mm
ANGULAR ± 0° 15'
0.X ± 0,3 mm
0.XX ± 0,1 mm

	REV. 0	REV. A	REV. B	REV. C	REV. D	REV. E	REV. F	REV. G	REV. H	REV. J	REV. K
DATE	23/12/21	30/06/23	24/05/24								
DESIGN	PSUB	PSUB	PSUB								
EXECUTION	CX4H	CX4H	CX4H								
CHECK	CJLZ	U4B8	EVJN								
APPROVAL	BEII	BF6I	BF6I								

PETROBRAS

DRAWING Nº: I-DE-3010.00-1300-270-P56-001

CLIENT: BÚZIOS

SHEET: 9 of 26

JOB: TSUDL

CC:

AREA: BÚZIOS

TITLE: LATERAL SUPPORT MODULE - MTL

INTERNO

SUB/ES/PSUB

FORM OWNED TO PETROBRAS NI-0381 REV. L

INFORMATION IN THIS DOCUMENT IS PROPERTY OF PETROBRAS, BEING PROHIBITED OUTSIDE OF THEIR PURPOSE

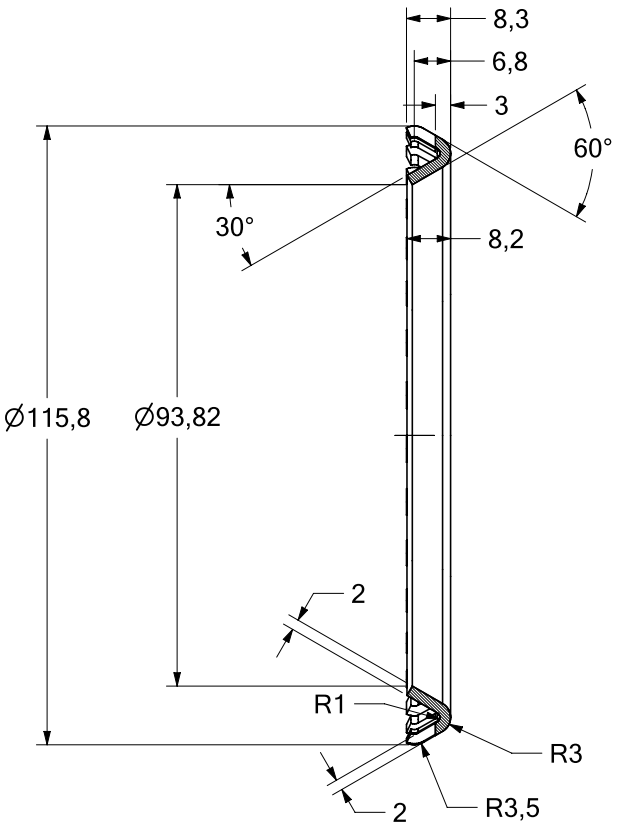

SECTION P-P
SCALE 1:1

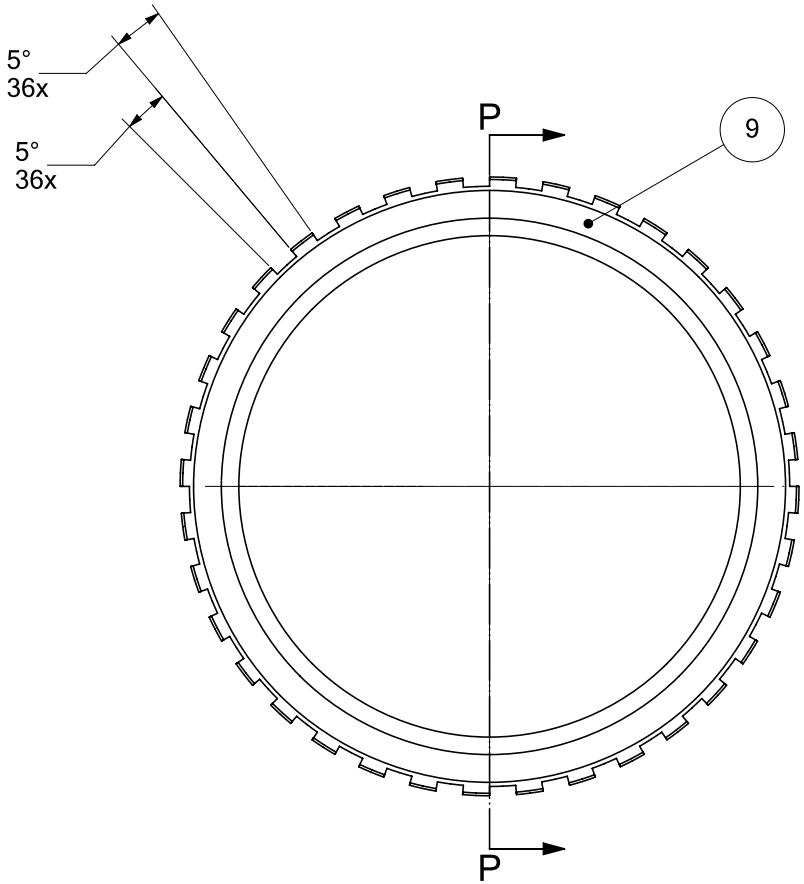

GENERAL NOTE:
NON SPECIFIED
TOLERANCES (mm):
X. ± 1mm
ANGULAR ± 0° 15'
0.X ± 0,3 mm
0.XX ± 0,1 mm

	REV. 0	REV. A	REV. B	REV. C	REV. D	REV. E	REV. F	REV. G	REV. H	REV. J	REV. K
DATE	23/12/21	30/06/23	24/05/24								
DESIGN	PSUB	PSUB	PSUB								
EXECUTION	CX4H	CX4H	CX4H								
CHECK	CJLZ	U4B8	EVJN								
APPROVAL	BEII	BF6I	BF6I								

PETROBRAS

DRAWING Nº: I-DE-3010.00-1300-270-P56-001

CLIENT: BÚZIOS

SHEET: 10 of 26

JOB: TSUDL

CC:

AREA: BÚZIOS

TITLE: LATERAL SUPPORT MODULE - MTL

INTERNO

SUB/ES/PSUB

FORM OWNED TO PETROBRAS NI-0381 REV. L

INFORMATION IN THIS DOCUMENT IS PROPERTY OF PETROBRAS, BEING PROHIBITED OUTSIDE OF THEIR PURPOSE

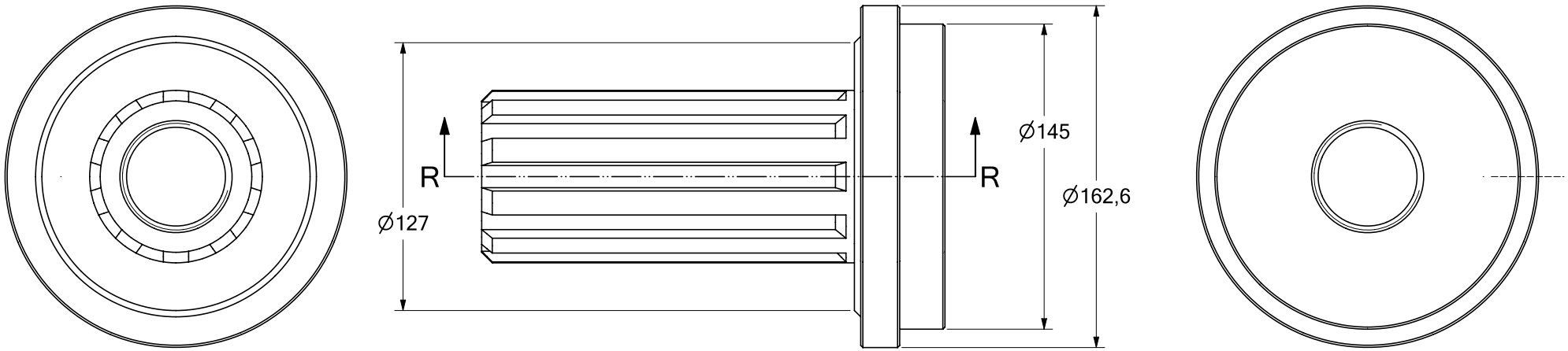

SCALE 1:2

REF: ISO 14
MEDIUM SERIES 10 x 72 x 82

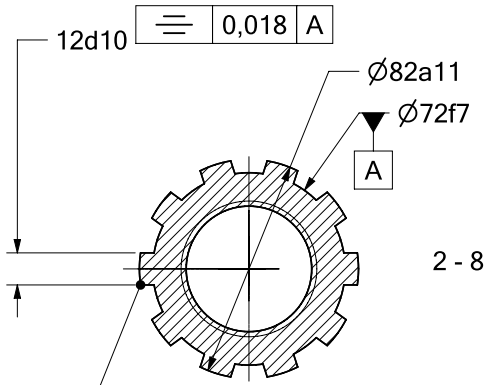

SECTION T-T

10X EQUALLY SPACED ACC. TO ISO14

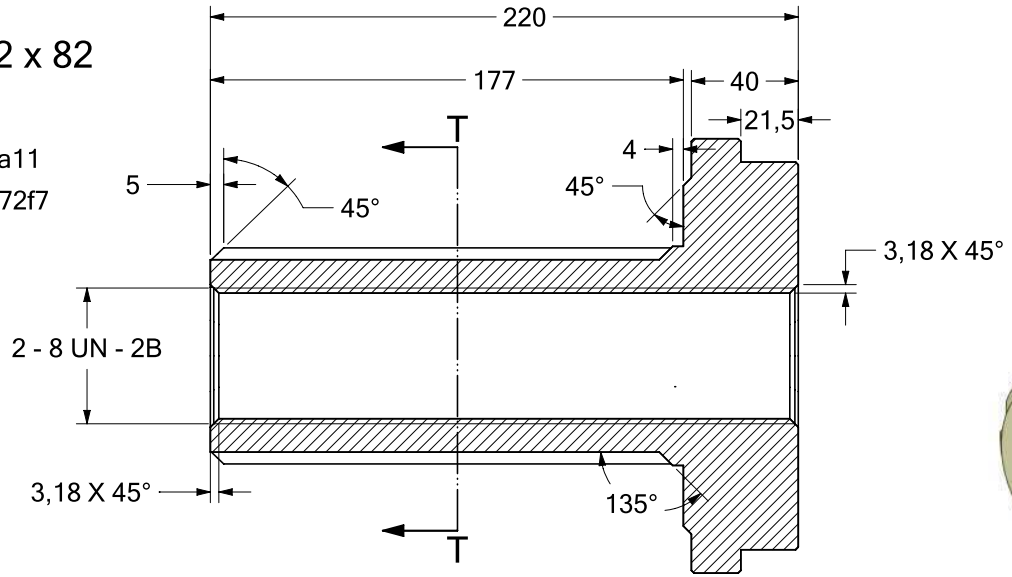

SECTION R-R

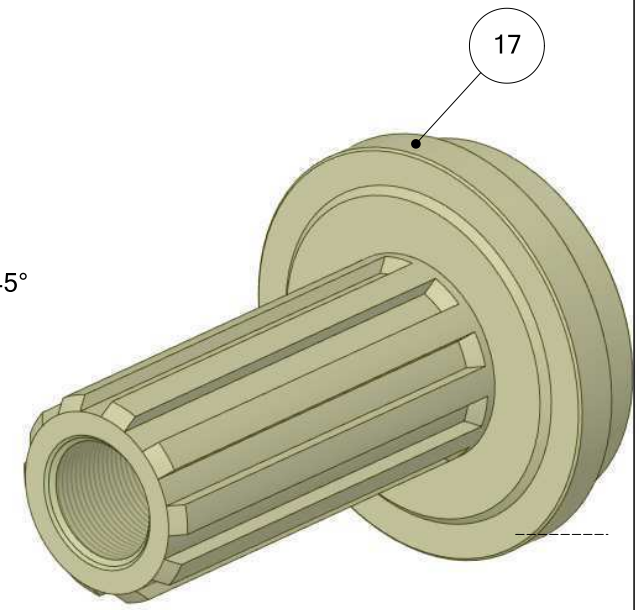

SCALE 1:2

GENERAL NOTE:
NON SPECIFIED TOLERANCES (mm):
X. ± 1mm ANGULAR ± 0° 15'
0.X ± 0,3 mm 0.XX ± 0,1 mm

	REV. 0	REV. A	REV. B	REV. C	REV. D	REV. E	REV. F	REV. G	REV. H	REV. J	REV. K
DATE	23/12/21	30/06/23	24/05/24								
DESIGN	PSUB	PSUB	PSUB								
EXECUTION	CX4H	CX4H	CX4H								
CHECK	CJLZ	U4B8	EVJN								
APPROVAL	BEII	BF6I	BF6I								

PETROBRAS

DRAWING		Nº:	I-DE-3010.00-1300-270-P56-001
CLIENT:	BÚZIOS	SHEET:	11 of 26
JOB:	TSUDL	CC:	
AREA:	BÚZIOS		
TITLE:	LATERAL SUPPORT MODULE - MTL		INTERNO
			SUB/ES/PSUB

FORM OWNED TO PETROBRAS NI-0381 REV. L

INFORMATION IN THIS DOCUMENT IS PROPERTY OF PETROBRAS, BEING PROHIBITED OUTSIDE OF THEIR PURPOSE

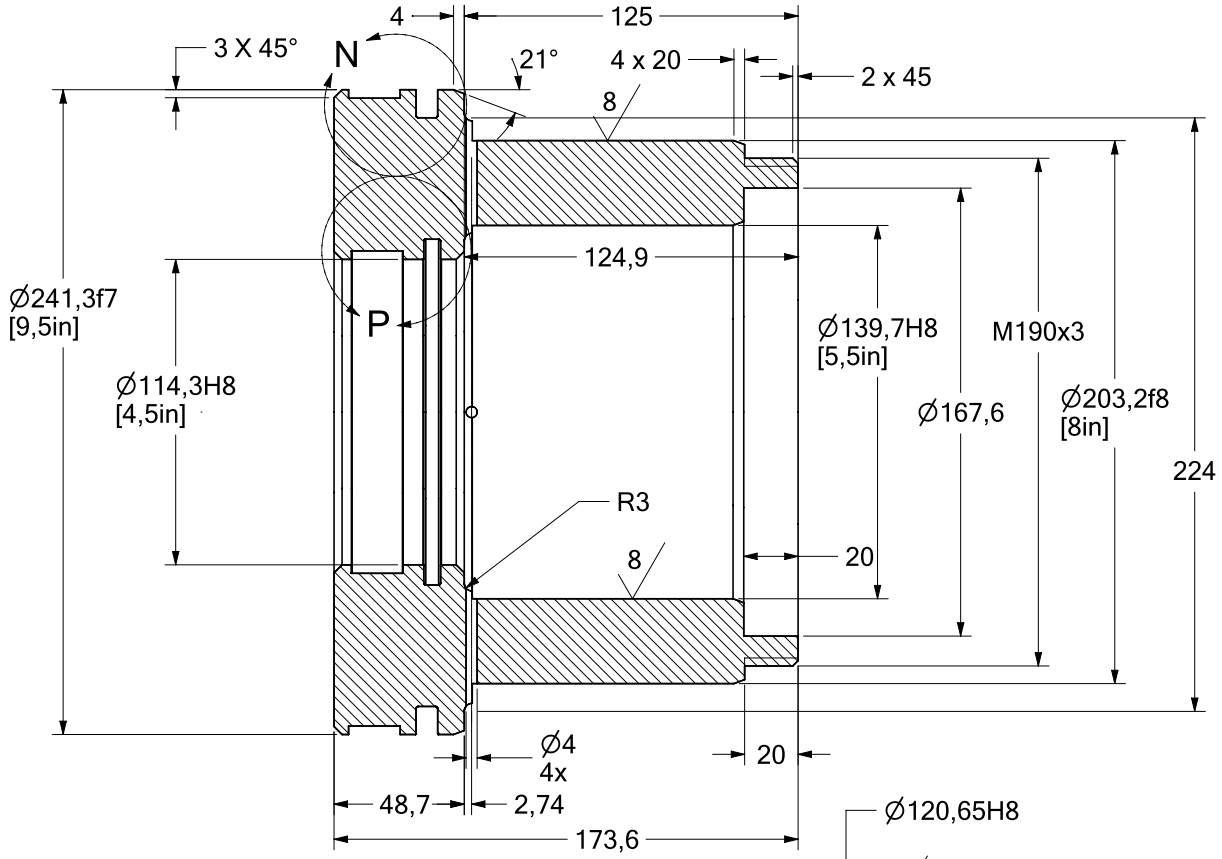

SECTION U-U
SCALE 1:2

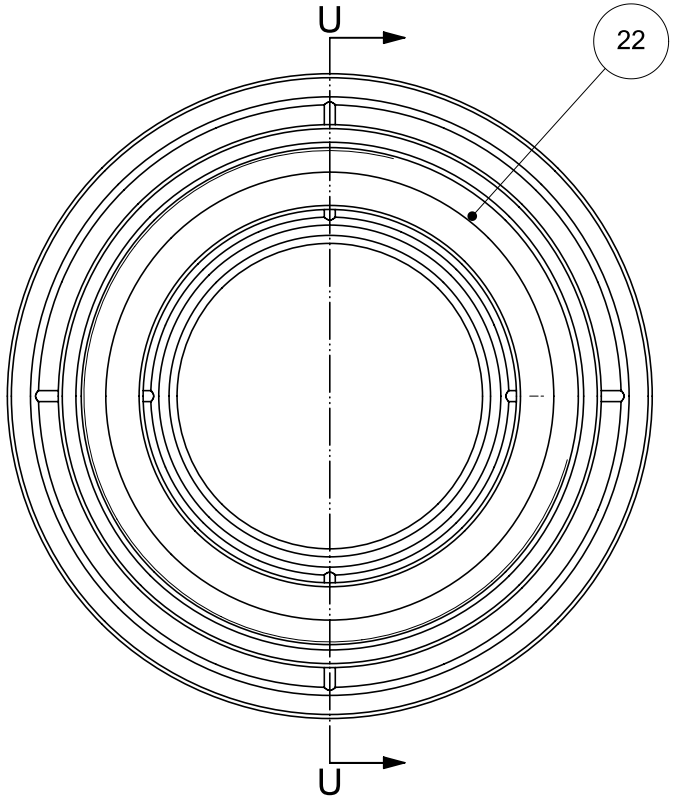

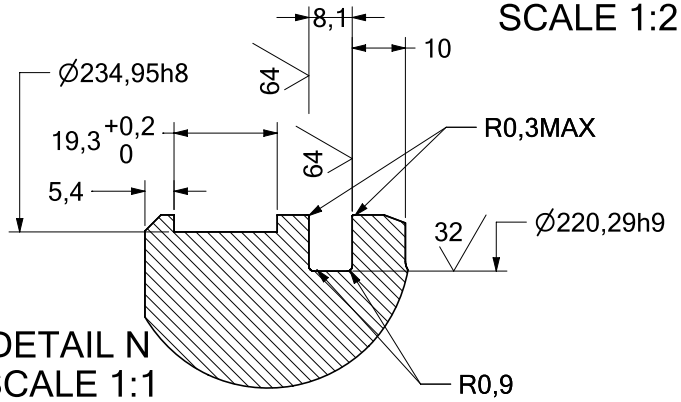

DETAIL N
SCALE 1:1

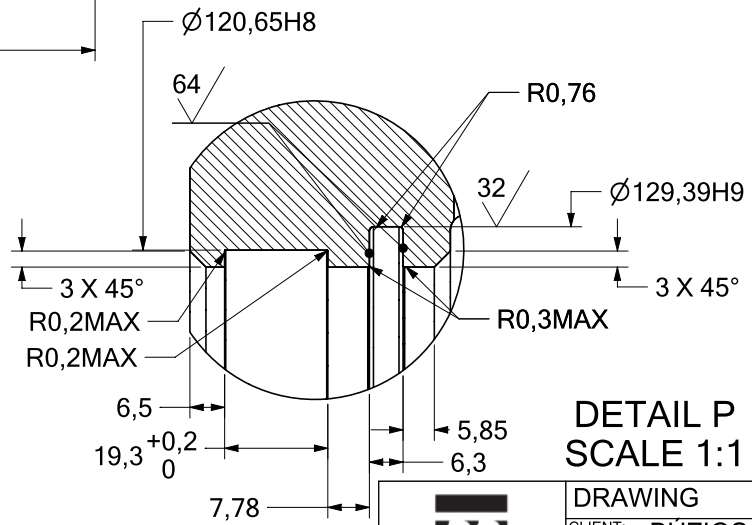

DETAIL P
SCALE 1:1

GENERAL NOTE:
NON SPECIFIED
TOLERANCES (mm):
X. ± 1mm
ANGULAR ± 0° 15'
0.X ± 0,3 mm
0.XX ± 0,1 mm

	REV. 0	REV. A	REV. B	REV. C	REV. D	REV. E	REV. F	REV. G	REV. H	REV. J	REV. K
DATE	23/12/21	30/06/23	24/05/24								
DESIGN	PSUB	PSUB	PSUB								
EXECUTION	CX4H	CX4H	CX4H								
CHECK	CJLZ	U4B8	EVJN								
APPROVAL	BEII	BF6I	BF6I								

PETROBRAS

DRAWING		Nº:	I-DE-3010.00-1300-270-P56-001
CLIENT:	BÚZIOS	SHEET:	12 of 26
JOB:	TSUDL	CC:	
AREA:	BÚZIOS		
TITLE:	LATERAL SUPPORT MODULE - MTL		INTERNO
			SUB/ES/PSUB

FORM OWNED TO PETROBRAS NI-0381 REV. L

INFORMATION IN THIS DOCUMENT IS PROPERTY OF PETROBRAS, BEING PROHIBITED OUTSIDE OF THEIR PURPOSE

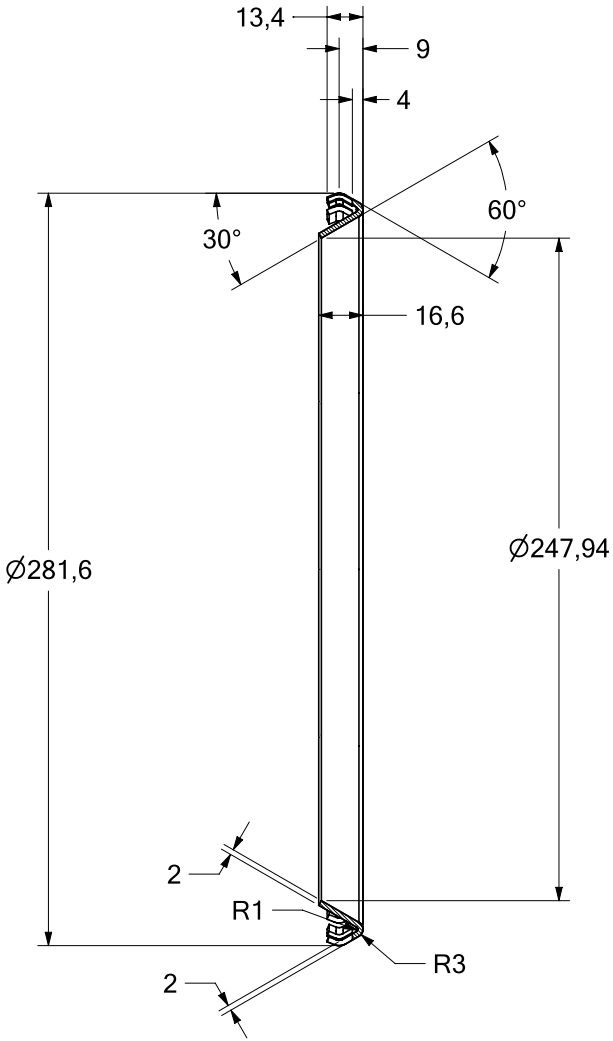

SECTION W-W
SCALE 1:2

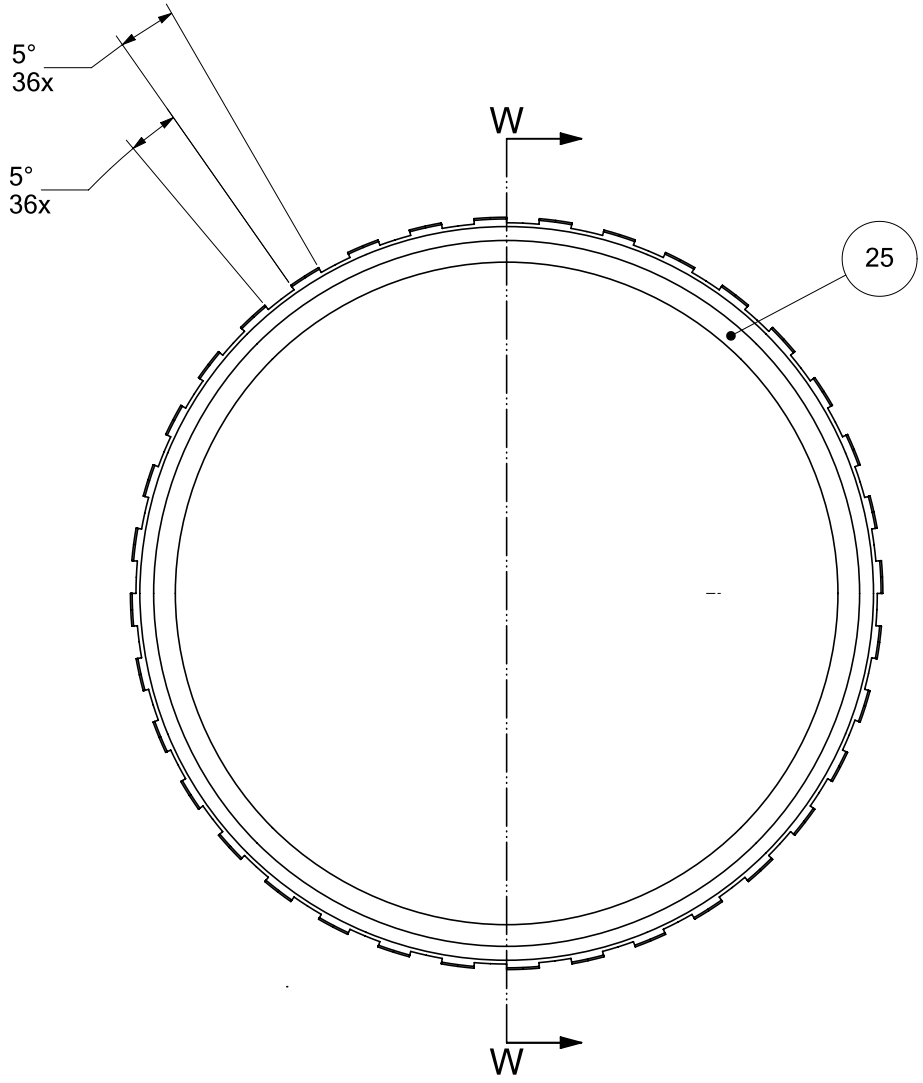

GENERAL NOTE:
NON SPECIFIED
TOLERANCES (mm):
X. ± 1mm
ANGULAR ± 0° 15'
0.X ± 0,3 mm
0.XX ± 0,1 mm

	REV. 0	REV. A	REV. B	REV. C	REV. D	REV. E	REV. F	REV. G	REV. H	REV. J	REV. K
DATE	23/12/21	30/06/23	24/05/24								
DESIGN	PSUB	PSUB	PSUB								
EXECUTION	CX4H	CX4H	CX4H								
CHECK	CJLZ	U4B8	EVJN								
APPROVAL	BEII	BF6I	BF6I								

PETROBRAS

DRAWING Nº: I-DE-3010.00-1300-270-P56-001

CLIENT: BÚZIOS

SHEET: 13 of 26

JOB: TSUDL

CC:

AREA: BÚZIOS

TITLE: LATERAL SUPPORT MODULE - MTL

INTERNO

SUB/ES/PSUB

FORM OWNED TO PETROBRAS NI-0381 REV. L

INFORMATION IN THIS DOCUMENT IS PROPERTY OF PETROBRAS, BEING PROHIBITED OUTSIDE OF THEIR PURPOSE

1 TSA COATING ACC. TO N-2568 300-350µm

2 PAINT WHITE COLOR ACCORDING TO PETROBRAS N-2037 THICKNESS MÍN. 450µm EXTERNAL SURFACE EXCEPT WHERE INDICATED

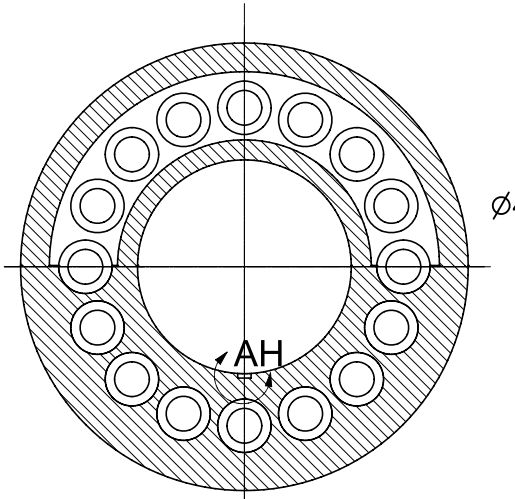

SECTION Y-Y

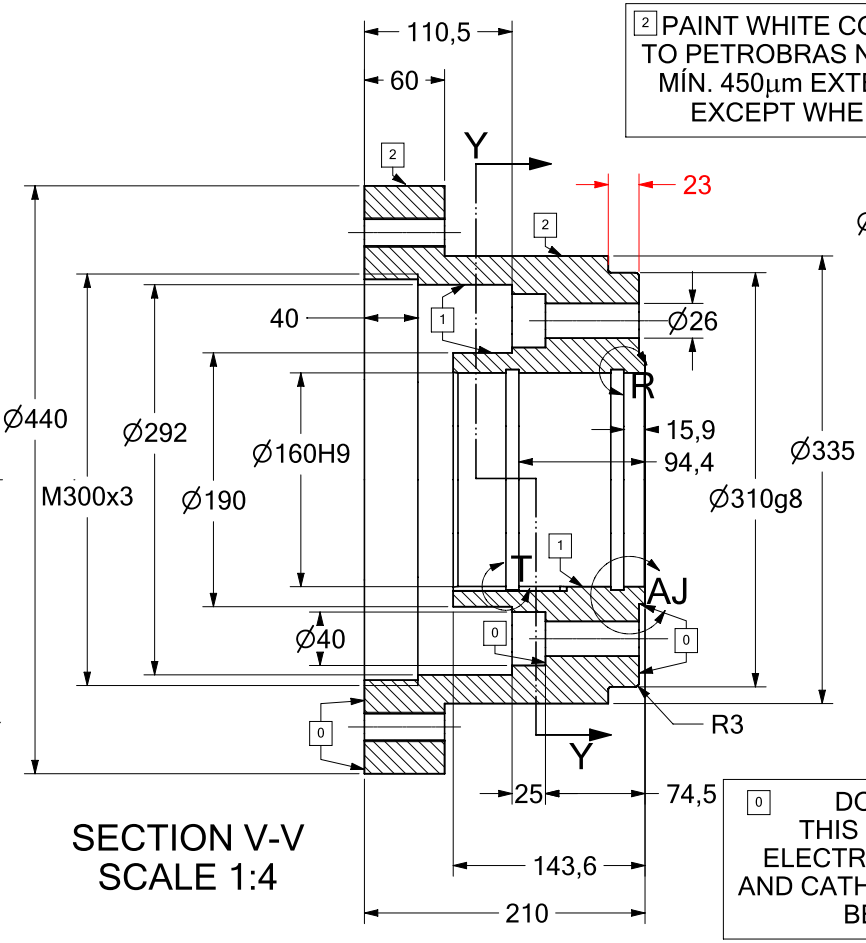

SECTION V-V
SCALE 1:4

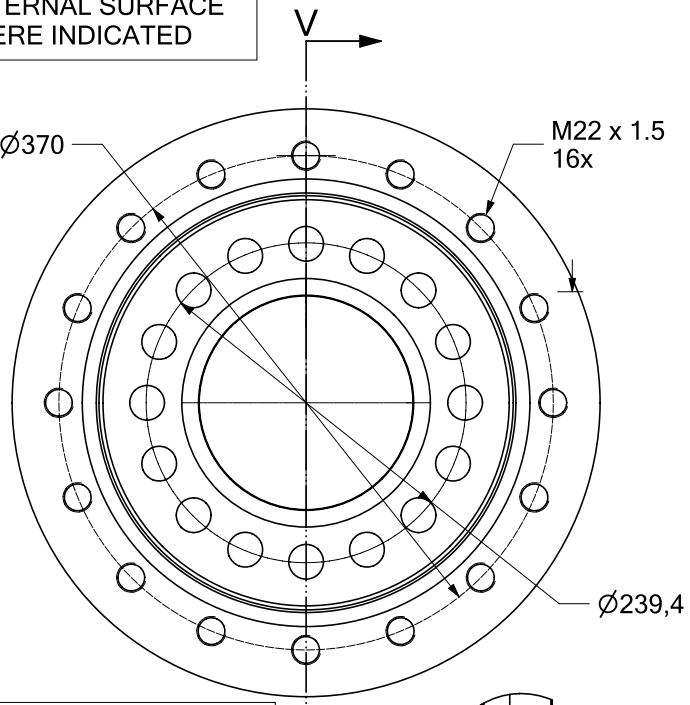

0 DO NOT PAINT THIS FACE SO THAT ELECTRICAL CONTINUITY AND CATHODIC PROTECTION BE ASSURED

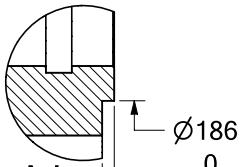

DETAIL AJ
SCALE 1:2

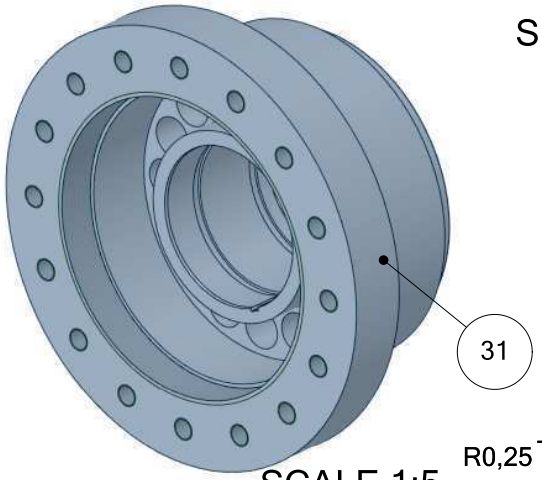

SCALE 1:5

HUB KEYWAY ACC. TO BS4235 FOR 10x8x22 KEY WITH FREE RUNNING FIT

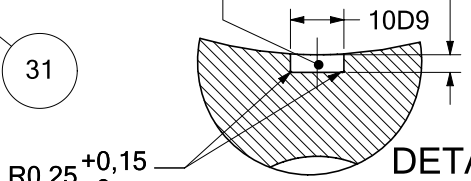

DETAIL AH
SCALE 1:1

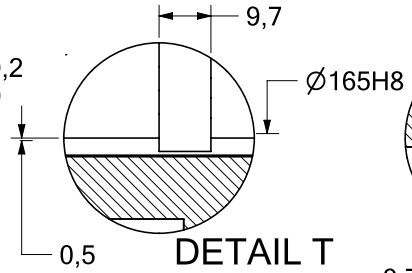

DETAIL T
SCALE 1:1

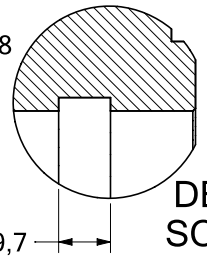

DETAIL R
SCALE 1:1

GENERAL NOTE:
NON SPECIFIED TOLERANCES (mm):
X. ± 1mm
ANGULAR ± 0° 15'
0.X ± 0,3 mm
0.XX ± 0,1 mm

	REV. 0	REV. A	REV. B	REV. C	REV. D	REV. E	REV. F	REV. G	REV. H	REV. J	REV. K
DATE	23/12/21	30/06/23	24/05/24								
DESIGN	PSUB	PSUB	PSUB								
EXECUTION	CX4H	CX4H	CX4H								
CHECK	CJLZ	U4B8	EVJN								
APPROVAL	BEII	BF6I	BF6I								

PETROBRAS

DRAWING Nº: I-DE-3010.00-1300-270-P56-001

CLIENT: BÚZIOS — SHEET: 14 of 26

JOB: TSUDL — CC:

AREA: BÚZIOS

TITLE: LATERAL SUPPORT MODULE - MTL — INTERNO — SUB/ES/PSUB

FORM OWNED TO PETROBRAS NI-0381 REV. L

INFORMATION IN THIS DOCUMENT IS PROPERTY OF PETROBRAS, BEING PROHIBITED OUTSIDE OF THEIR PURPOSE

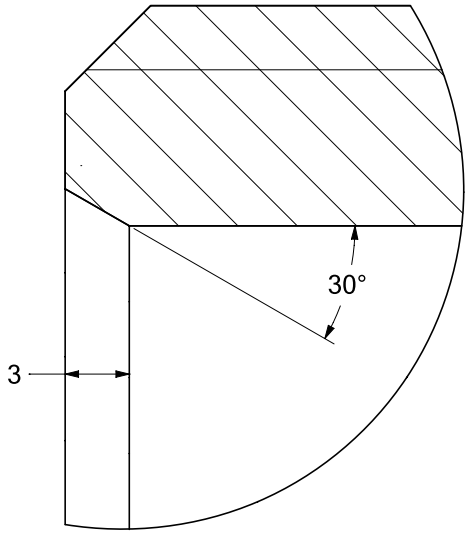

DETAIL U
SCALE 4:1

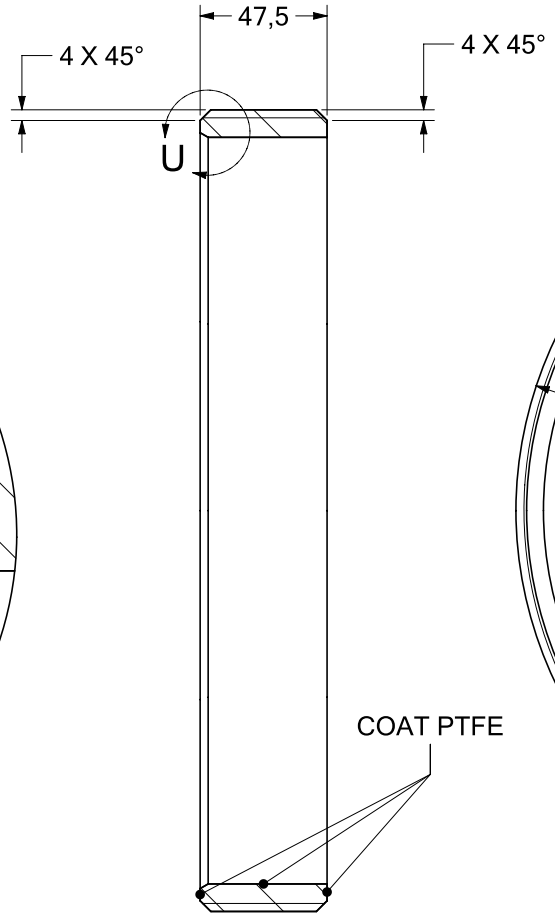

SECTION AA-AA
SCALE 1:2

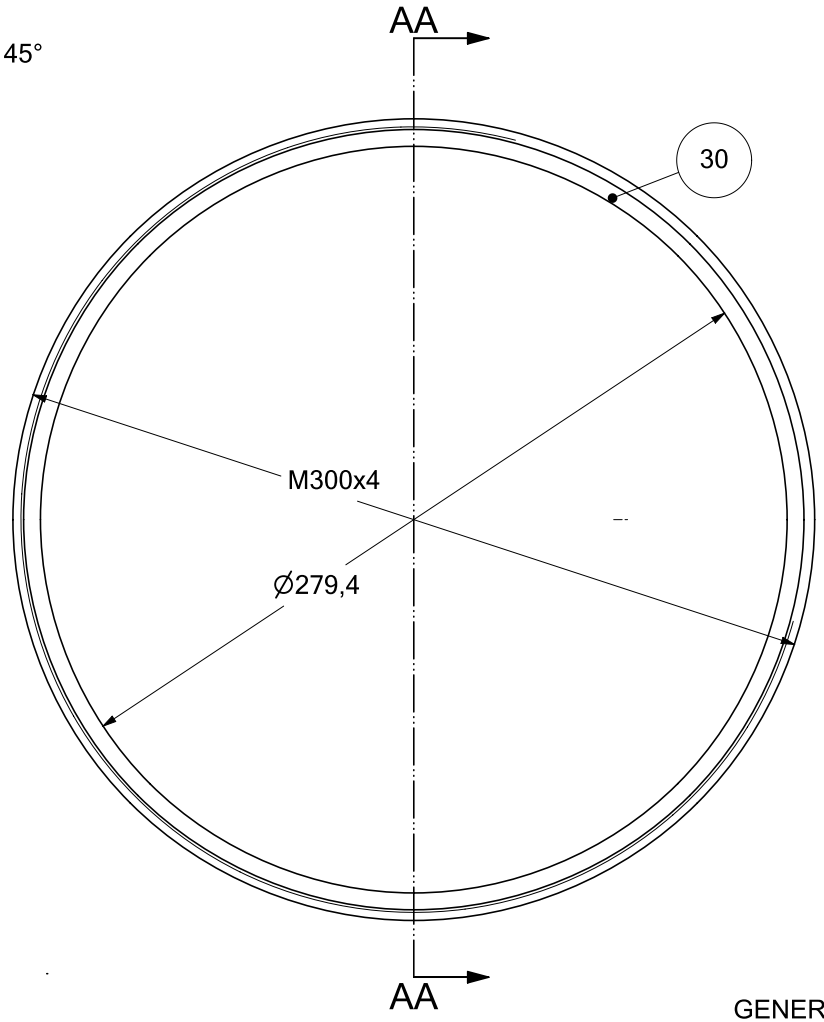

GENERAL NOTE:
NON SPECIFIED
TOLERANCES (mm):
X. ± 1mm
ANGULAR ± 0° 15'
0.X ± 0,3 mm
0.XX ± 0,1 mm

	REV. 0	REV. A	REV. B	REV. C	REV. D	REV. E	REV. F	REV. G	REV. H	REV. J	REV. K
DATE	23/12/21	30/06/23	24/05/24								
DESIGN	PSUB	PSUB	PSUB								
EXECUTION	CX4H	CX4H	CX4H								
CHECK	CJLZ	U4B8	EVJN								
APPROVAL	BEII	BF6I	BF6I								

PETROBRAS

DRAWING Nº: I-DE-3010.00-1300-270-P56-001

CLIENT: BÚZIOS

SHEET: 15 of 26

JOB: TSUDL

CC:

AREA: BÚZIOS

TITLE: LATERAL SUPPORT MODULE - MTL

INTERNO

SUB/ES/PSUB

FORM OWNED TO PETROBRAS NI-0381 REV. L

INFORMATION IN THIS DOCUMENT IS PROPERTY OF PETROBRAS, BEING PROHIBITED OUTSIDE OF THEIR PURPOSE

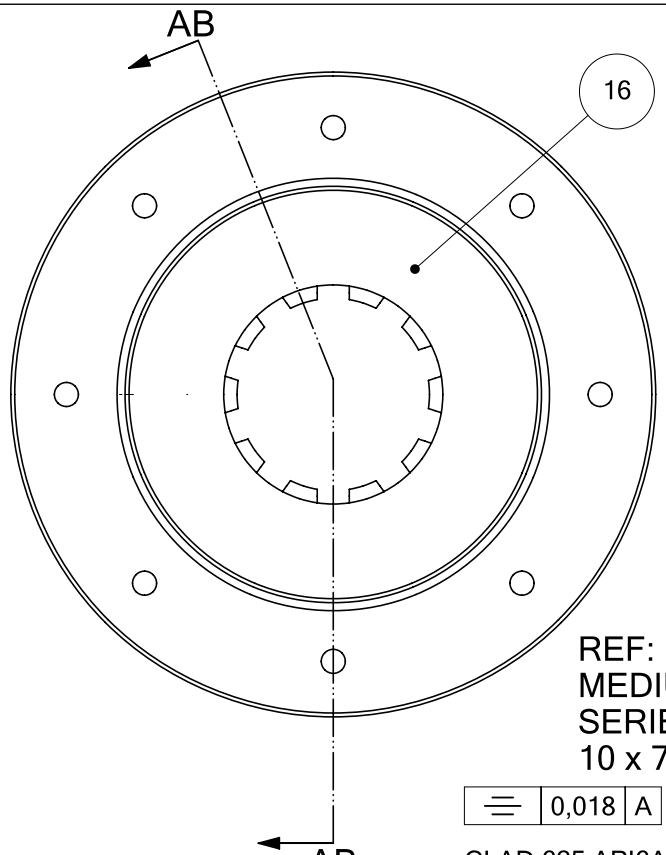

REF: ISO 14
MEDIUM
SERIES
10 x 72 x 82

	0,018	A

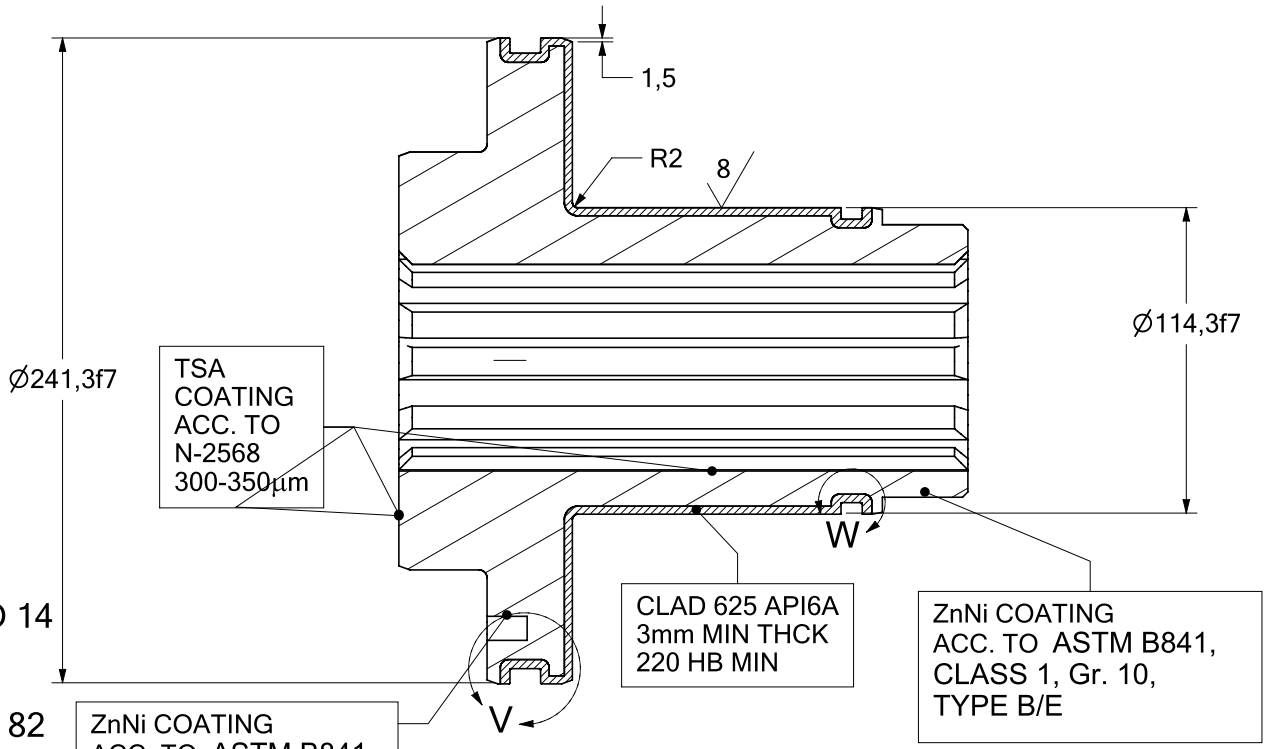

SECTION AB-AB
SCALE 1:2

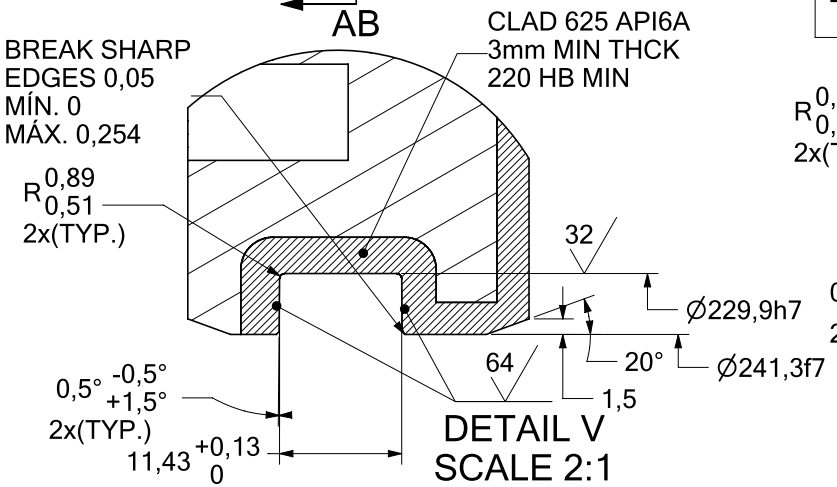

DETAIL V
SCALE 2:1

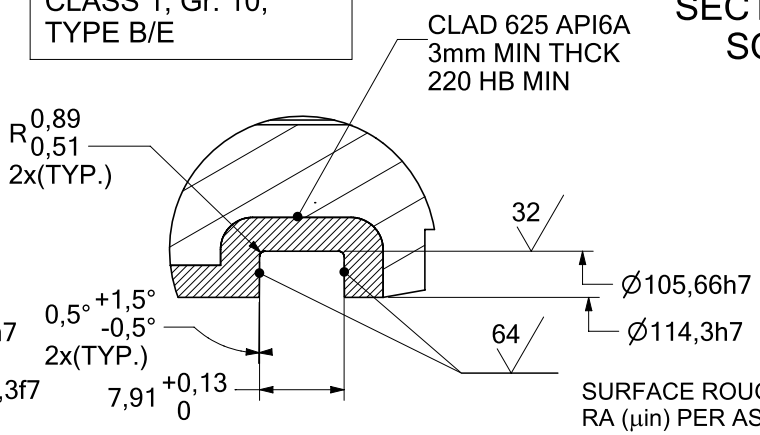

DETAIL W
SCALE 2:1

SURFACE ROUGHNESS
RA (µin) PER ASME B46.1

GENERAL NOTE:
NON SPECIFIED
TOLERANCES (mm):
X. ± 1mm
ANGULAR ± 0° 15'
0.X ± 0,3 mm
0.XX ± 0,1 mm

	REV. 0	REV. A	REV. B	REV. C	REV. D	REV. E	REV. F	REV. G	REV. H	REV. J	REV. K
DATE	23/12/21	30/06/23	24/05/24								
DESIGN	PSUB	PSUB	PSUB								
EXECUTION	CX4H	CX4H	CX4H								
CHECK	CJLZ	U4B8	EVJN								
APPROVAL	BEII	BF6I	BF6I								

PETROBRAS

DRAWING		Nº:	I-DE-3010.00-1300-270-P56-001
CLIENT:	BÚZIOS	SHEET:	16 of 26
JOB:	TSUDL	CC:	
AREA:	BÚZIOS		
TITLE:	LATERAL SUPPORT MODULE - MTL		INTERNO
			SUB/ES/PSUB

FORM OWNED TO PETROBRAS NI-0381 REV. L
INFORMATION IN THIS DOCUMENT IS PROPERTY OF PETROBRAS, BEING PROHIBITED OUTSIDE OF THEIR PURPOSE

PAINT WHITE COLOR ACCORDING TO PETROBRAS N-2037 THICKNESS. MÍN 450µm EXTERNAL SURFACE EXCEPT WHERE INDICATED

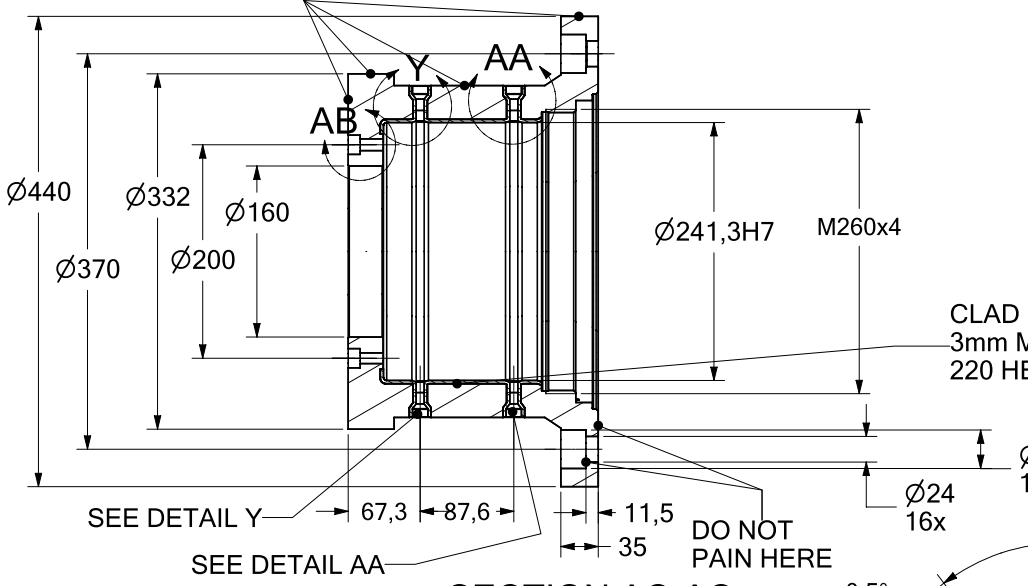

SECTION AC-AC
SCALE 1:5

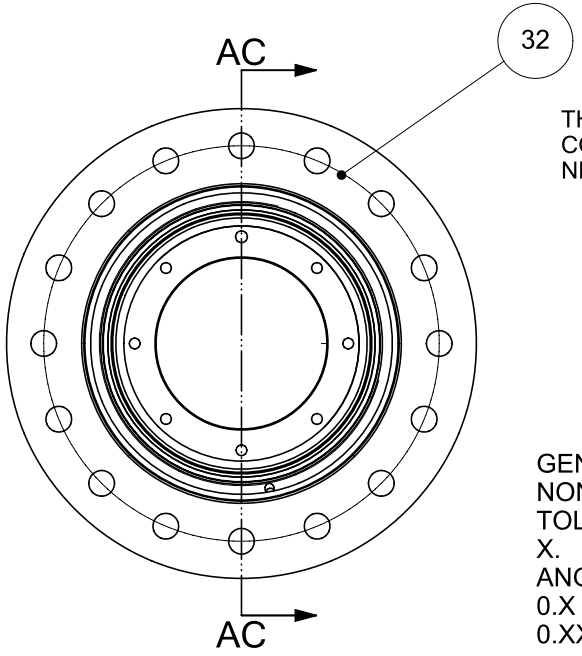

THIS COMPONENT CONTINUES NEXT PAGE

GENERAL NOTE:
NON SPECIFIED TOLERANCES (mm):
X. ± 1mm
ANGULAR ± 0° 15'
0.X ± 0,3 mm
0.XX ± 0,1 mm

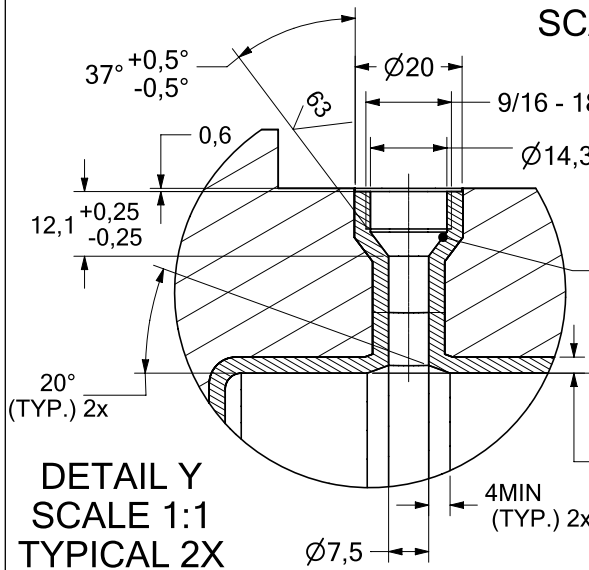

DETAIL Y
SCALE 1:1
TYPICAL 2X

SURFACE ROUGHNESS
RA (µin) PER ASME B46.1

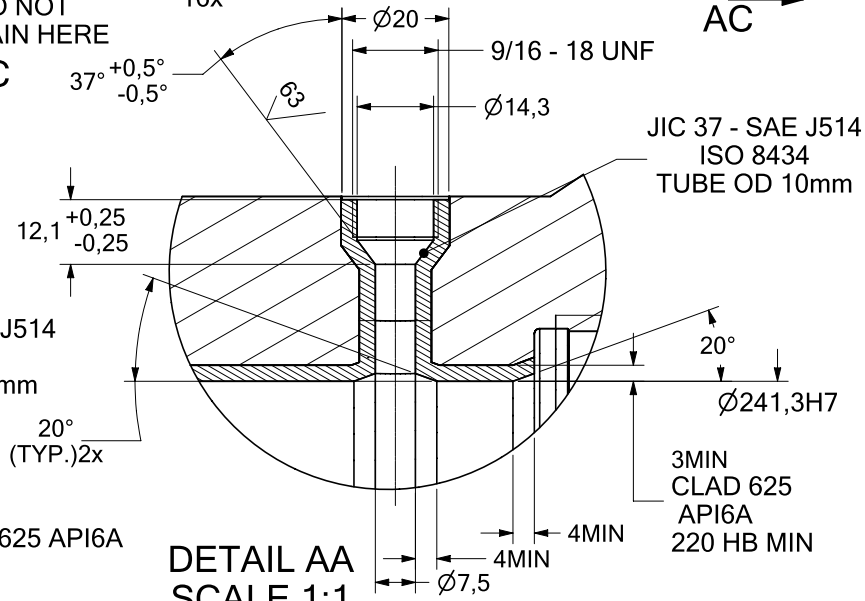

DETAIL AA
SCALE 1:1
TYPICAL 2X

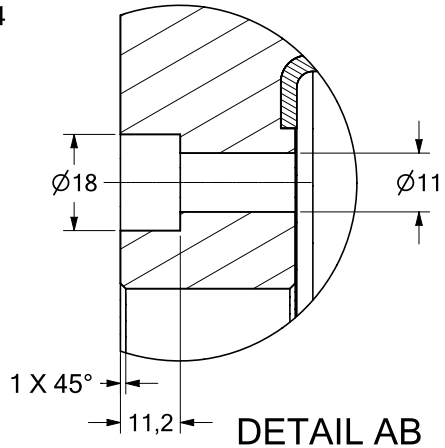

DETAIL AB
SCALE 1:1

	REV. 0	REV. A	REV. B	REV. C	REV. D	REV. E	REV. F	REV. G	REV. H	REV. J	REV. K
DATE	23/12/21	30/06/23	24/05/24								
DESIGN	PSUB	PSUB	PSUB								
EXECUTION	CX4H	CX4H	CX4H								
CHECK	CJLZ	U4B8	EVJN								
APPROVAL	BEII	BF6I	BF6I								

PETROBRAS

DRAWING		Nº:	I-DE-3010.00-1300-270-P56-001
CLIENT:	BÚZIOS	SHEET:	17 of 26
JOB:	TSUDL	CC:	
AREA:	BÚZIOS		
TITLE:	LATERAL SUPPORT MODULE - MTL		INTERNO
			SUB/ES/PSUB

INFORMATION IN THIS DOCUMENT IS PROPERTY OF PETROBRAS, BEING PROHIBITED OUTSIDE OF THEIR PURPOSE

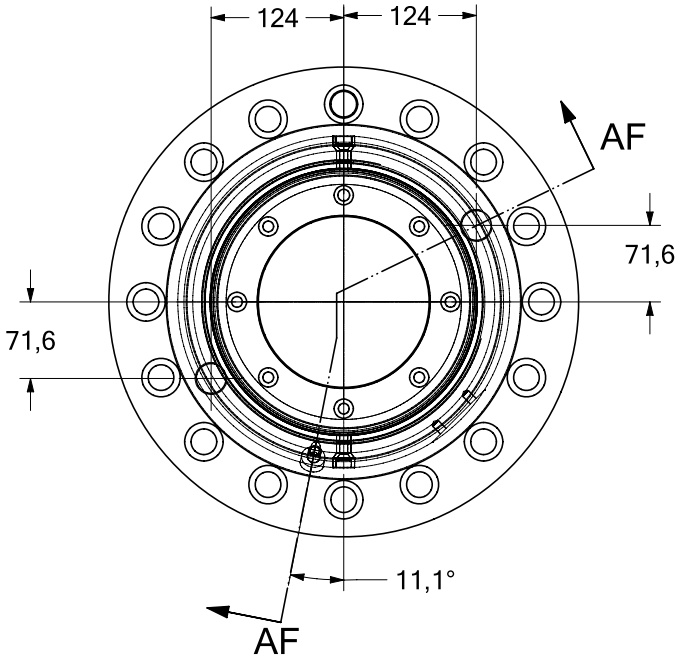

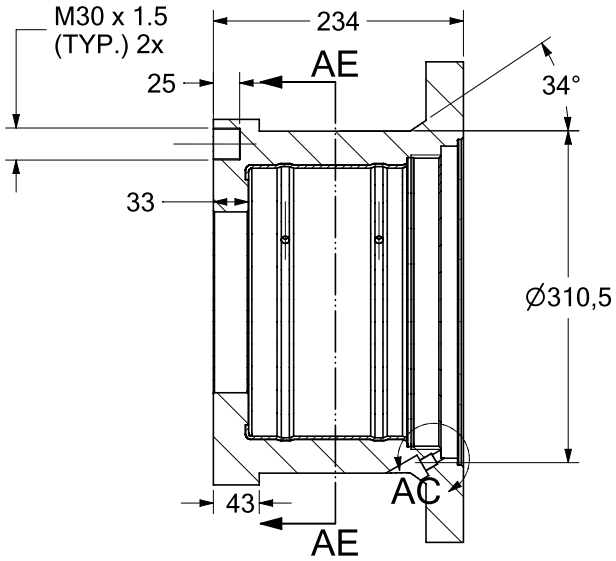

SECTION AF-AF
SCALE 1:5

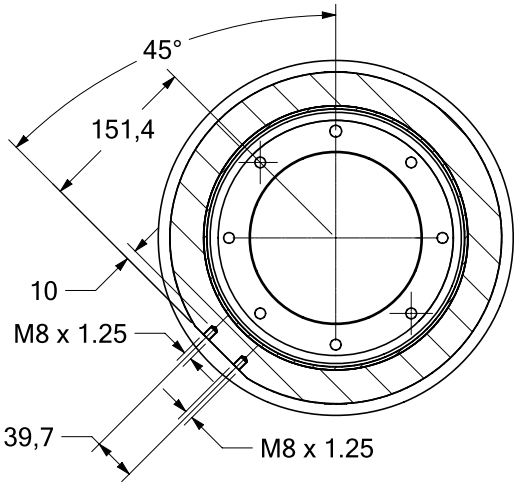

SECTION AE-AE

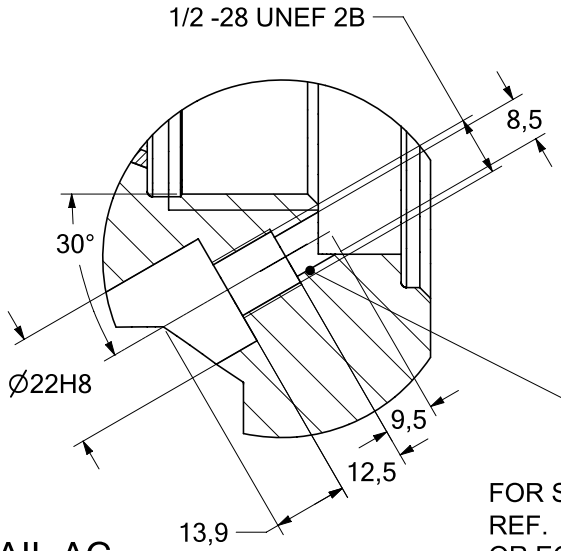

DETAIL AC
SCALE 1:1

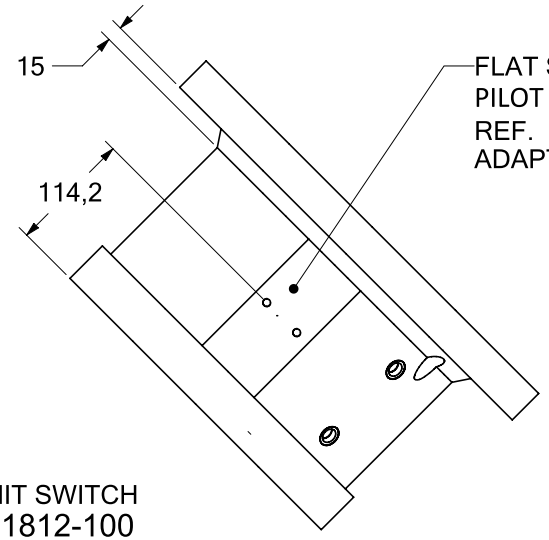

FLAT SURFACE AND HOLES FOR INSTLATION OF PILOT PISTON STYLE DUAL PILOT OPERATED CHECK VALVE REF. CDPH103A65N-8T OR EQUIVALENT WITH ADAPTATION REQUIRED. DO NOT PAINT THIS FACE

FOR SUBSEA LIMIT SWITCH
REF. HYDRACON1812-100
OR EQUIVALENT

GENERAL NOTE:
NON SPECIFIED
TOLERANCES (mm):
X. ± 1mm
ANGULAR ± 0° 15'
0.X ± 0,3 mm
0.XX ± 0,1 mm

	REV. 0	REV. A	REV. B	REV. C	REV. D	REV. E	REV. F	REV. G	REV. H	REV. J	REV. K
DATE	23/12/21	30/06/23	24/05/24								
DESIGN	PSUB	PSUB	PSUB								
EXECUTION	CX4H	CX4H	CX4H								
CHECK	CJLZ	U4B8	EVJN								
APPROVAL	BEII	BF6I	BF6I								

PETROBRAS

DRAWING		Nº:	I-DE-3010.00-1300-270-P56-001
CLIENT:	BÚZIOS	SHEET:	18 of 26
JOB:	TSUDL	CC:	
AREA:	BÚZIOS		
TITLE:	LATERAL SUPPORT MODULE - MTL		INTERNO
			SUB/ES/PSUB

FORM OWNED TO PETROBRAS NI-0381 REV. L

INFORMATION IN THIS DOCUMENT IS PROPERTY OF PETROBRAS, BEING PROHIBITED OUTSIDE OF THEIR PURPOSE

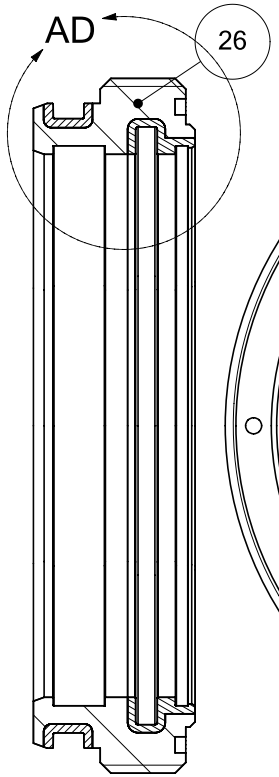

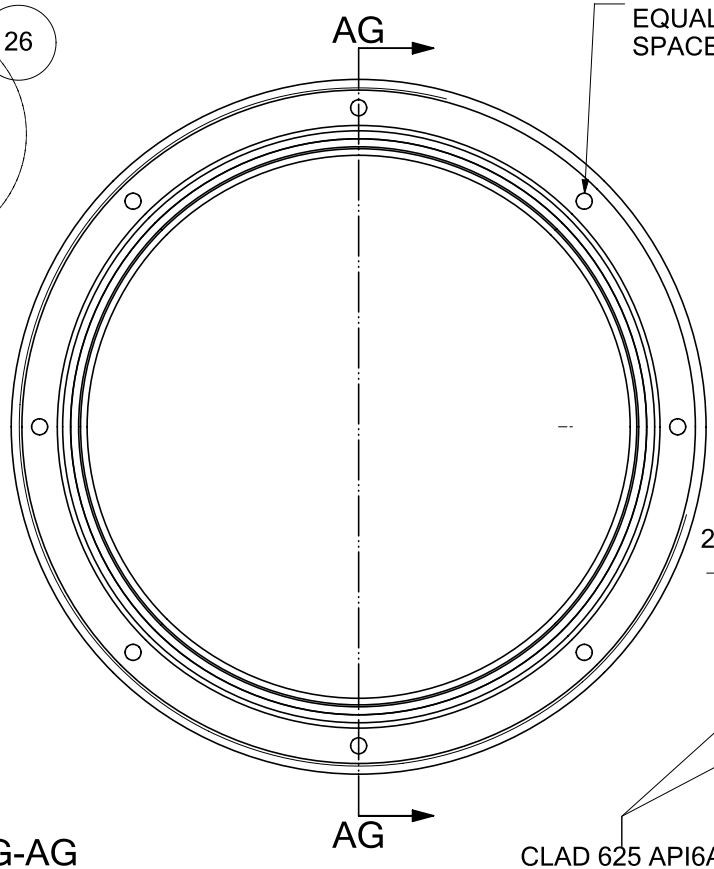

SECTION AG-AG
SCALE 1:2

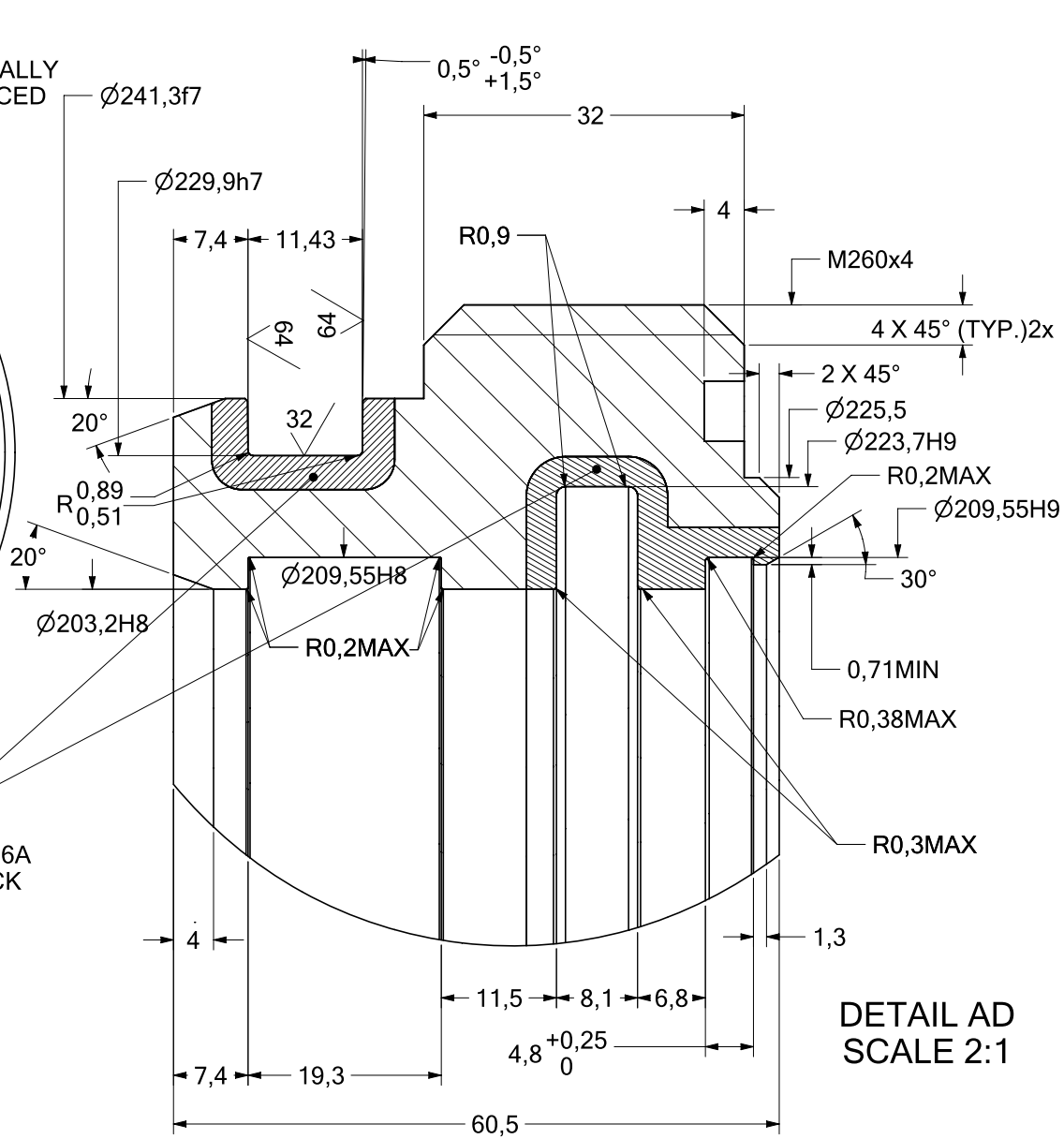

DETAIL AD
SCALE 2:1

SURFACE ROUGHNESS
RA (µin) PER ASME B46.1

GENERAL NOTE:
NON SPECIFIED
TOLERANCES (mm):
X. ± 1mm
ANGULAR ± 0° 15'
0.X ± 0,3 mm
0.XX ± 0,1 mm

	REV. 0	REV. A	REV. B	REV. C	REV. D	REV. E	REV. F	REV. G	REV. H	REV. J	REV. K
DATE	23/12/21	30/06/23	24/05/24								
DESIGN	PSUB	PSUB	PSUB								
EXECUTION	CX4H	CX4H	CX4H								
CHECK	CJLZ	U4B8	EVJN								
APPROVAL	BEII	BF6I	BF6I								

PETROBRAS

DRAWING Nº: I-DE-3010.00-1300-270-P56-001
CLIENT: BÚZIOS
SHEET: 19 of 26
JOB: TSUDL
CC:
AREA: BÚZIOS
TITLE: LATERAL SUPPORT MODULE - MTL
INTERNO
SUB/ES/PSUB

FORM OWNED TO PETROBRAS NI-0381 REV. L
INFORMATION IN THIS DOCUMENT IS PROPERTY OF PETROBRAS, BEING PROHIBITED OUTSIDE OF THEIR PURPOSE

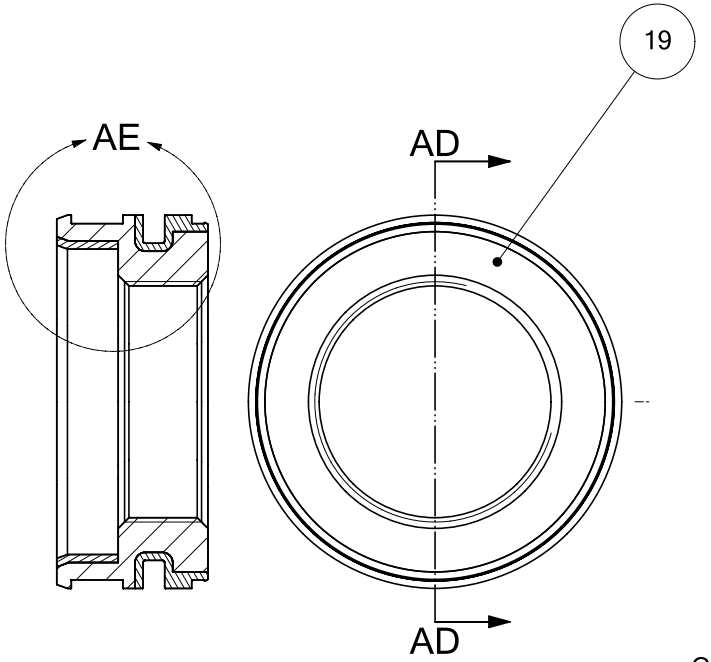

SECTION AD-AD
SCALE 1:2

SURFACE ROUGHNESS
RA (µin) PER ASME B46.1

GENERAL NOTE:
NON SPECIFIED
TOLERANCES (mm):
X. ± 1mm
ANGULAR ± 0° 15'
0.X ± 0,3 mm
0.XX ± 0,1 mm

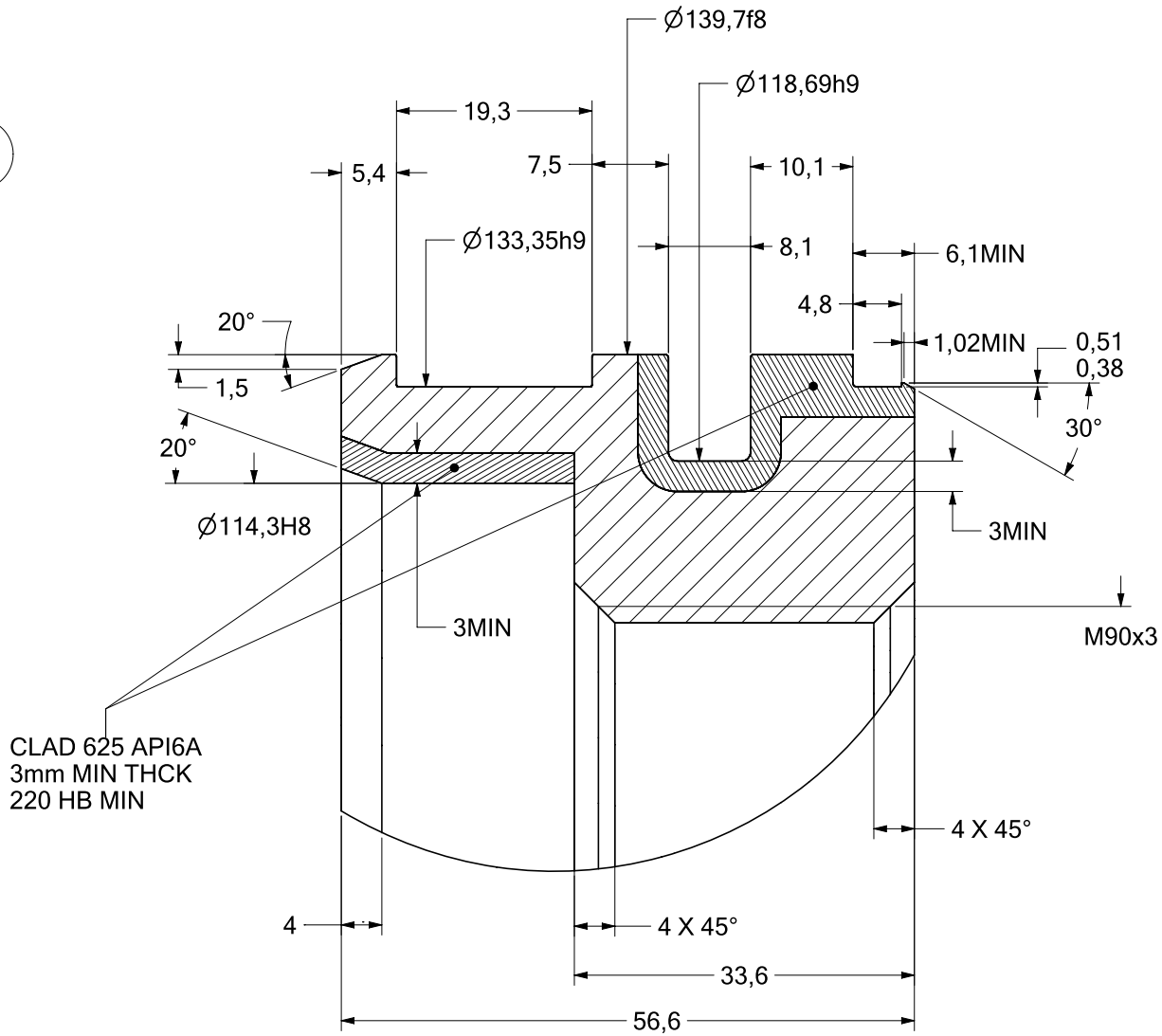

DETAIL AE
SCALE 2:1

	REV. 0	REV. A	REV. B	REV. C	REV. D	REV. E	REV. F	REV. G	REV. H	REV. J	REV. K
DATE	23/12/21	30/06/23	24/05/24								
DESIGN	PSUB	PSUB	PSUB								
EXECUTION	CX4H	CX4H	CX4H								
CHECK	CJLZ	U4B8	EVJN								
APPROVAL	BEII	BF6I	BF6I								

PETROBRAS

DRAWING Nº: I-DE-3010.00-1300-270-P56-001
CLIENT: BÚZIOS
SHEET: 20 of 26
JOB: TSUDL
CC:
AREA: BÚZIOS
TITLE: LATERAL SUPPORT MODULE - MTL
INTERNO
SUB/ES/PSUB

FORM OWNED TO PETROBRAS NI-0381 REV. L

INFORMATION IN THIS DOCUMENT IS PROPERTY OF PETROBRAS, BEING PROHIBITED OUTSIDE OF THEIR PURPOSE

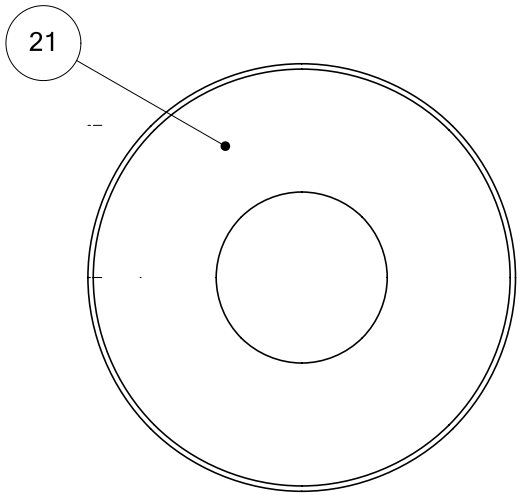

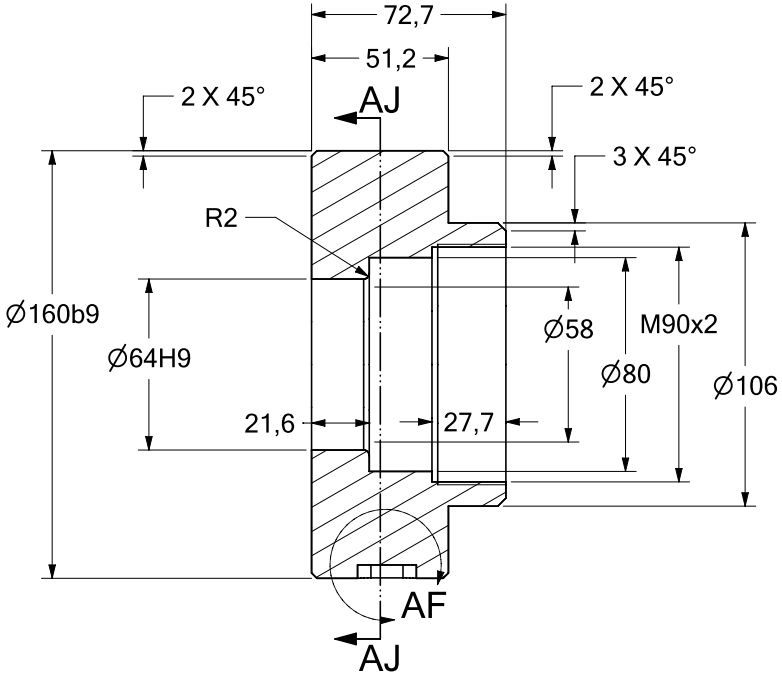

SECTION AH-AH
SCALE 1:2

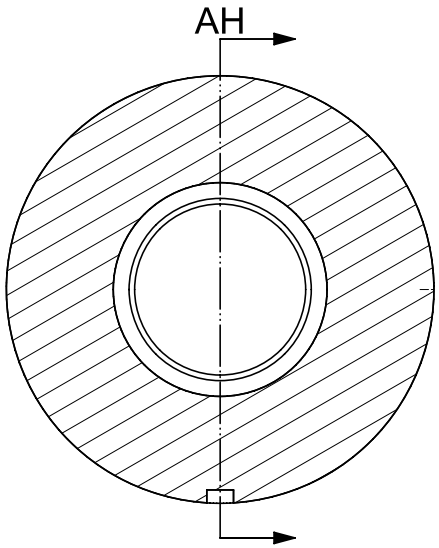

SECTION AJ-AJ

SHAFT KEYSEAT ACC.
TO BS4235 FOR
10x8x22 KEY WITH
FREE RUNNING FIT

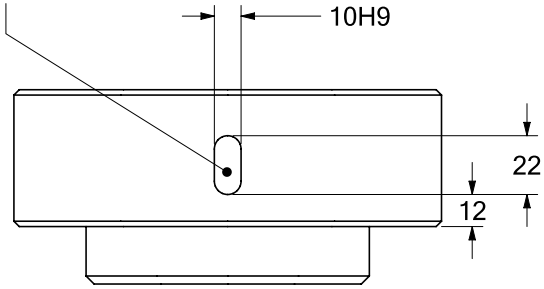

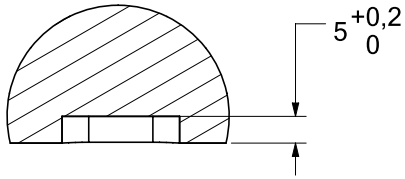

DETAIL AF
SCALE 1:1

GENERAL NOTE:
NON SPECIFIED
TOLERANCES (mm):
X. ± 1mm
ANGULAR ± 0° 15'
0.X ± 0,3 mm
0.XX ± 0,1 mm

	REV. 0	REV. A	REV. B	REV. C	REV. D	REV. E	REV. F	REV. G	REV. H	REV. J	REV. K
DATE	23/12/21	30/06/23	24/05/24								
DESIGN	PSUB	PSUB	PSUB								
EXECUTION	CX4H	CX4H	CX4H								
CHECK	CJLZ	U4B8	EVJN								
APPROVAL	BEII	BF6I	BF6I								

PETROBRAS

DRAWING Nº: I-DE-3010.00-1300-270-P56-001
CLIENT: BÚZIOS
SHEET: 21 of 26
JOB: TSUDL
CC:
AREA: BÚZIOS
TITLE: LATERAL SUPPORT MODULE - MTL
INTERNO
SUB/ES/PSUB

FORM OWNED TO PETROBRAS NI-0381 REV. L

INFORMATION IN THIS DOCUMENT IS PROPERTY OF PETROBRAS, BEING PROHIBITED OUTSIDE OF THEIR PURPOSE

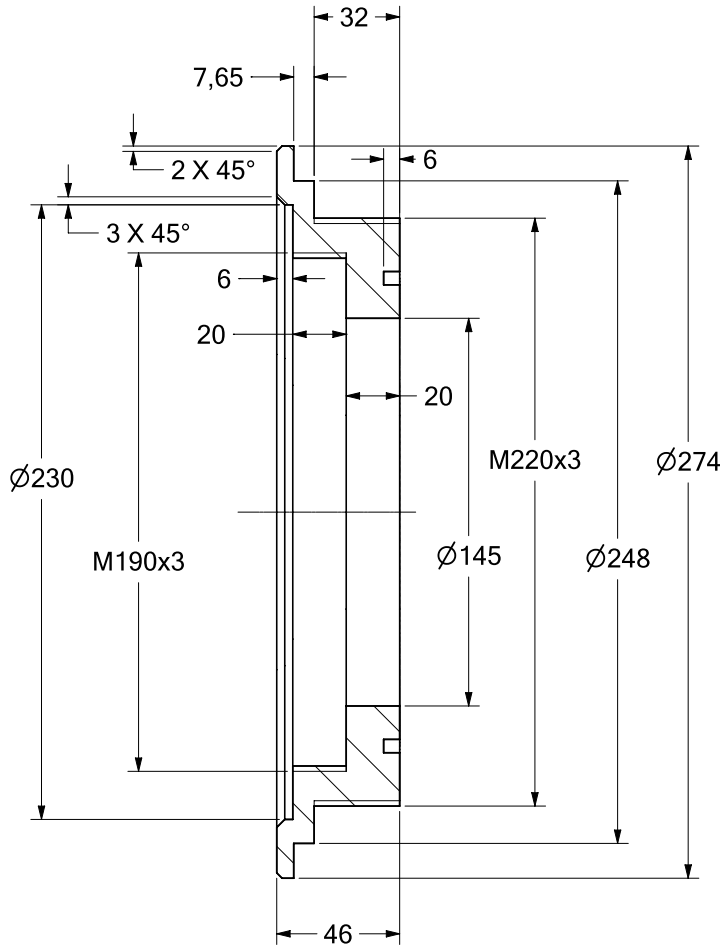

SECTION AL-AL
SCALE 1:2

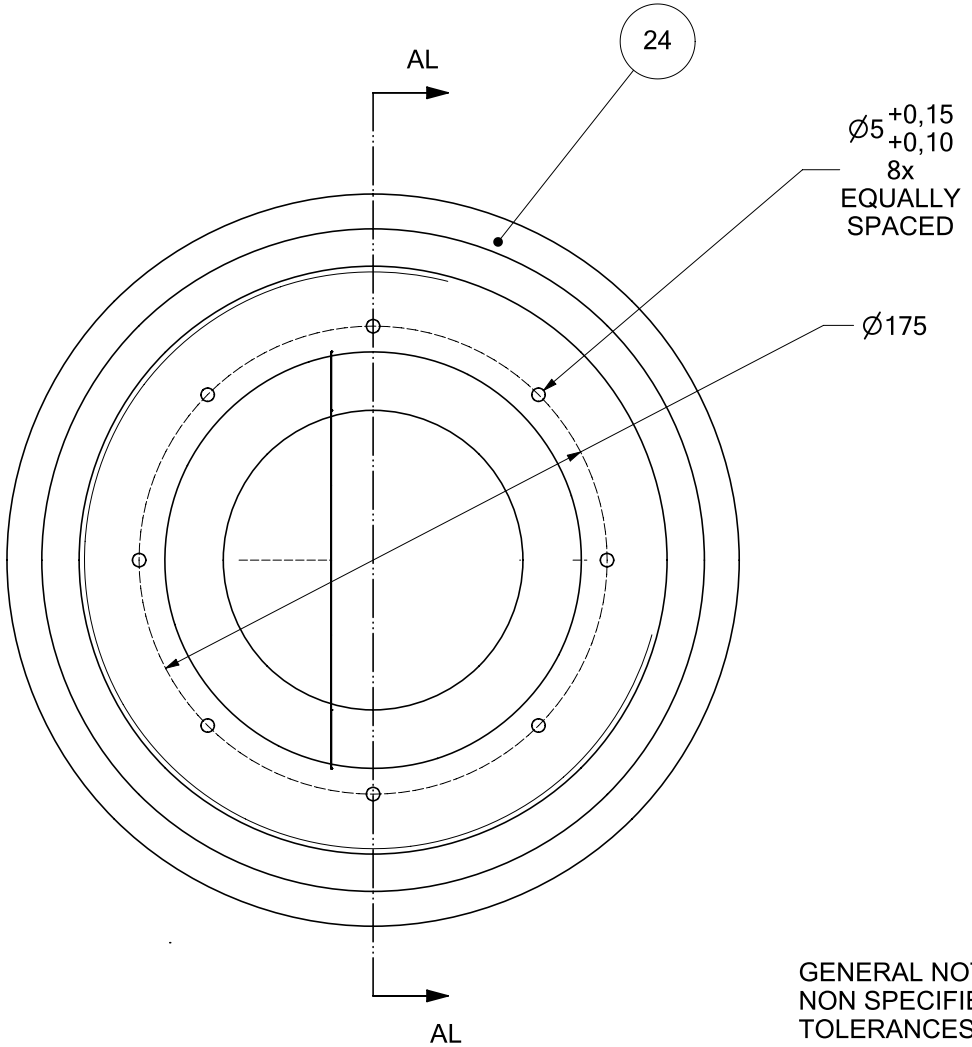

GENERAL NOTE:
NON SPECIFIED
TOLERANCES (mm):
X. ± 1mm
ANGULAR ± 0° 15'
0.X ± 0,3 mm
0.XX ± 0,1 mm

	REV. 0	REV. A	REV. B	REV. C	REV. D	REV. E	REV. F	REV. G	REV. H	REV. J	REV. K
DATE	23/12/21	30/06/23	24/05/24								
DESIGN	PSUB	PSUB	PSUB								
EXECUTION	CX4H	CX4H	CX4H								
CHECK	CJLZ	U4B8	EVJN								
APPROVAL	BEII	BF6I	BF6I								

PETROBRAS

DRAWING Nº: I-DE-3010.00-1300-270-P56-001
CLIENT: BÚZIOS
SHEET: 22 of 26
JOB: TSUDL
CC:
AREA: BÚZIOS
TITLE: LATERAL SUPPORT MODULE - MTL
INTERNO
SUB/ES/PSUB

FORM OWNED TO PETROBRAS NI-0381 REV. L

INFORMATION IN THIS DOCUMENT IS PROPERTY OF PETROBRAS, BEING PROHIBITED OUTSIDE OF THEIR PURPOSE

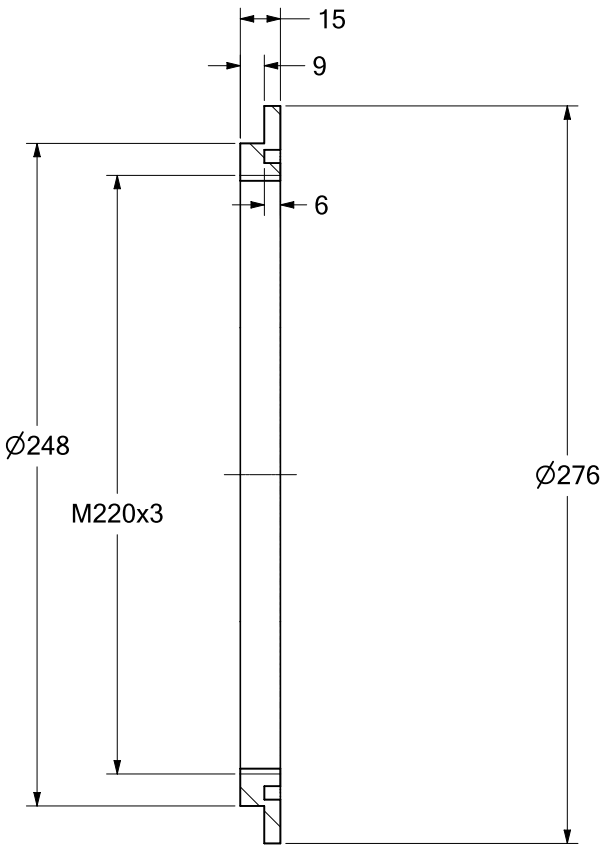

SECTION AM-AM
SCALE 1:2

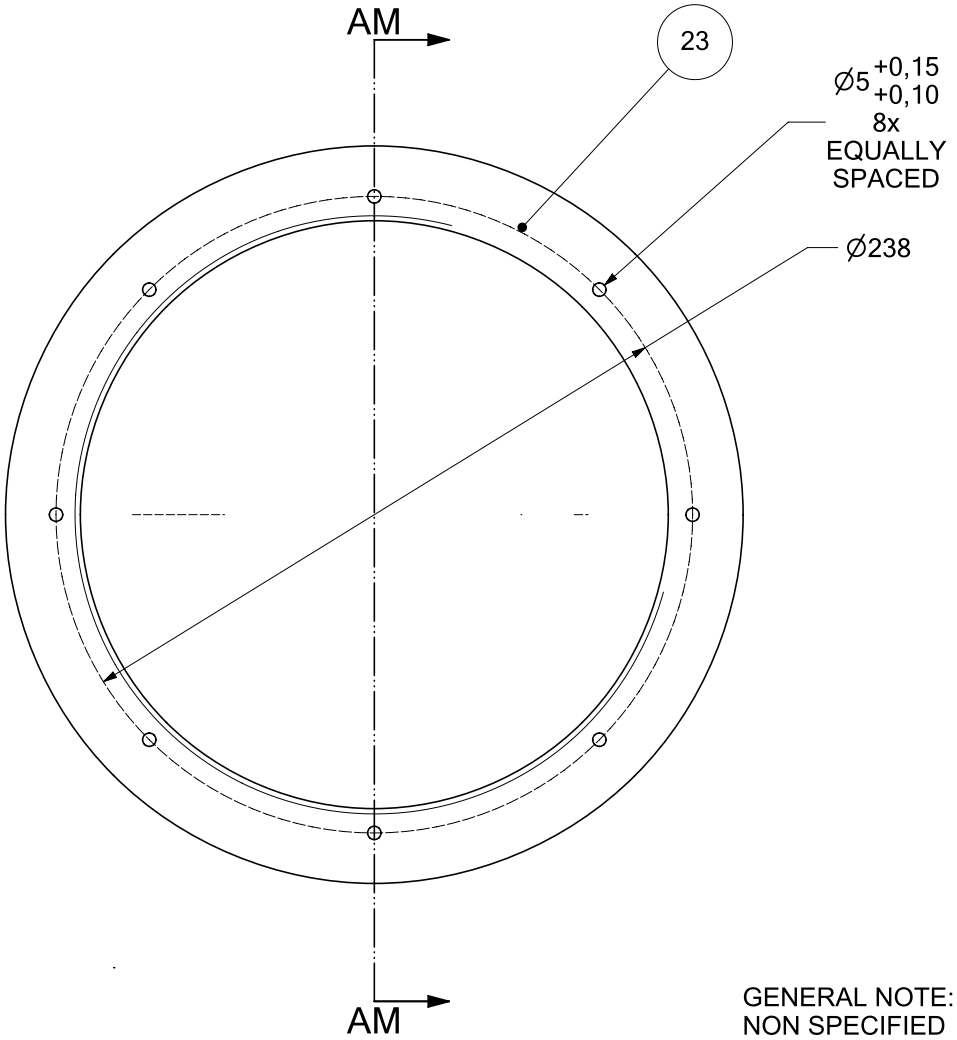

GENERAL NOTE:
NON SPECIFIED
TOLERANCES (mm):
X. ± 1mm
ANGULAR ± 0° 15'
0.X ± 0,3 mm
0.XX ± 0,1 mm

	REV. 0	REV. A	REV. B	REV. C	REV. D	REV. E	REV. F	REV. G	REV. H	REV. J	REV. K
DATE	23/12/21	30/06/23	24/05/24								
DESIGN	PSUB	PSUB	PSUB								
EXECUTION	CX4H	CX4H	CX4H								
CHECK	CJLZ	U4B8	EVJN								
APPROVAL	BEII	BF6I	BF6I								

PETROBRAS

DRAWING Nº: I-DE-3010.00-1300-270-P56-001

CLIENT: BÚZIOS

SHEET: 23 of 26

JOB: TSUDL

CC:

AREA: BÚZIOS

TITLE: LATERAL SUPPORT MODULE - MTL

INTERNO

SUB/ES/PSUB

FORM OWNED TO PETROBRAS NI-0381 REV. L

INFORMATION IN THIS DOCUMENT IS PROPERTY OF PETROBRAS, BEING PROHIBITED OUTSIDE OF THEIR PURPOSE

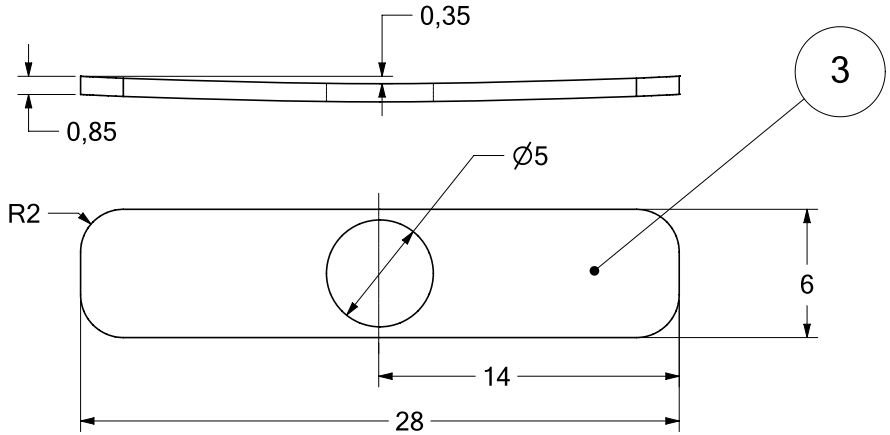

SCALE 4:1

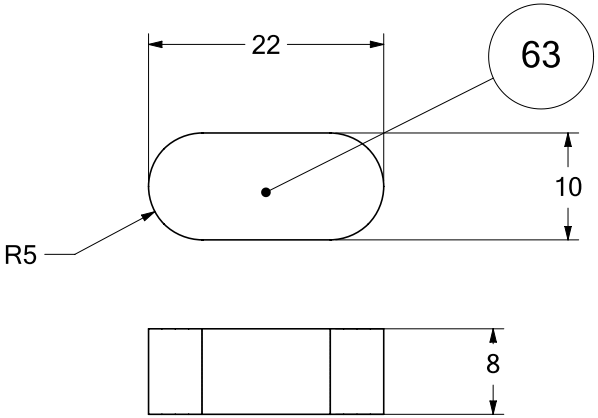

SCALE 2:1

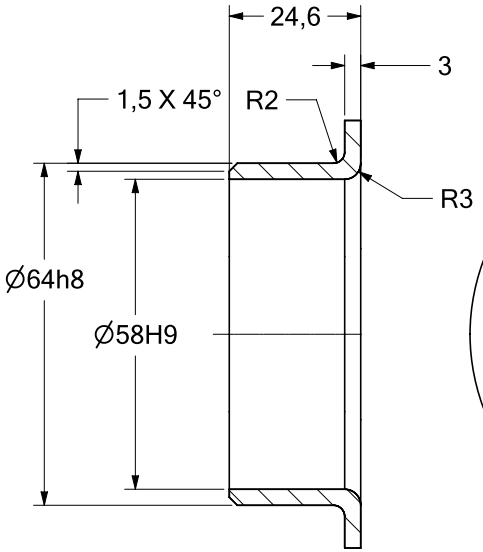

SECTION AK-AK
SCALE 1:1

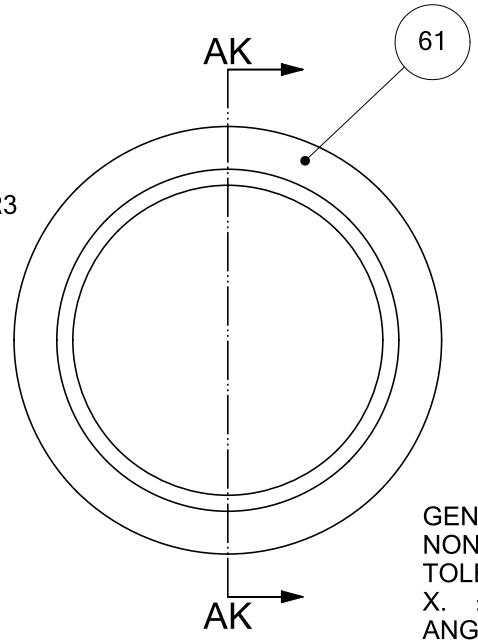

GENERAL NOTE:
NON SPECIFIED
TOLERANCES (mm):
X. ± 1mm
ANGULAR ± 0° 15'
0.X ± 0,3 mm
0.XX ± 0,1 mm

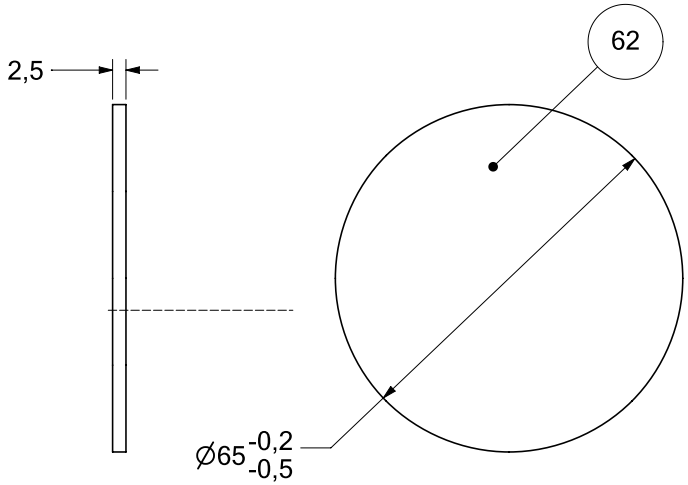

SCALE 1:1

	REV. 0	REV. A	REV. B	REV. C	REV. D	REV. E	REV. F	REV. G	REV. H	REV. J	REV. K
DATE	23/12/21	30/06/23	24/05/24								
DESIGN	PSUB	PSUB	PSUB								
EXECUTION	CX4H	CX4H	CX4H								
CHECK	CJLZ	U4B8	EVJN								
APPROVAL	BEII	BF6I	BF6I								

PETROBRAS

DRAWING		Nº:	I-DE-3010.00-1300-270-P56-001
CLIENT:	BÚZIOS	SHEET:	24 of 26
JOB:	TSUDL	CC:	
AREA:	BÚZIOS		
TITLE:	LATERAL SUPPORT MODULE - MTL		INTERNO
			SUB/ES/PSUB

FORM OWNED TO PETROBRAS NI-0381 REV. L
INFORMATION IN THIS DOCUMENT IS PROPERTY OF PETROBRAS, BEING PROHIBITED OUTSIDE OF THEIR PURPOSE

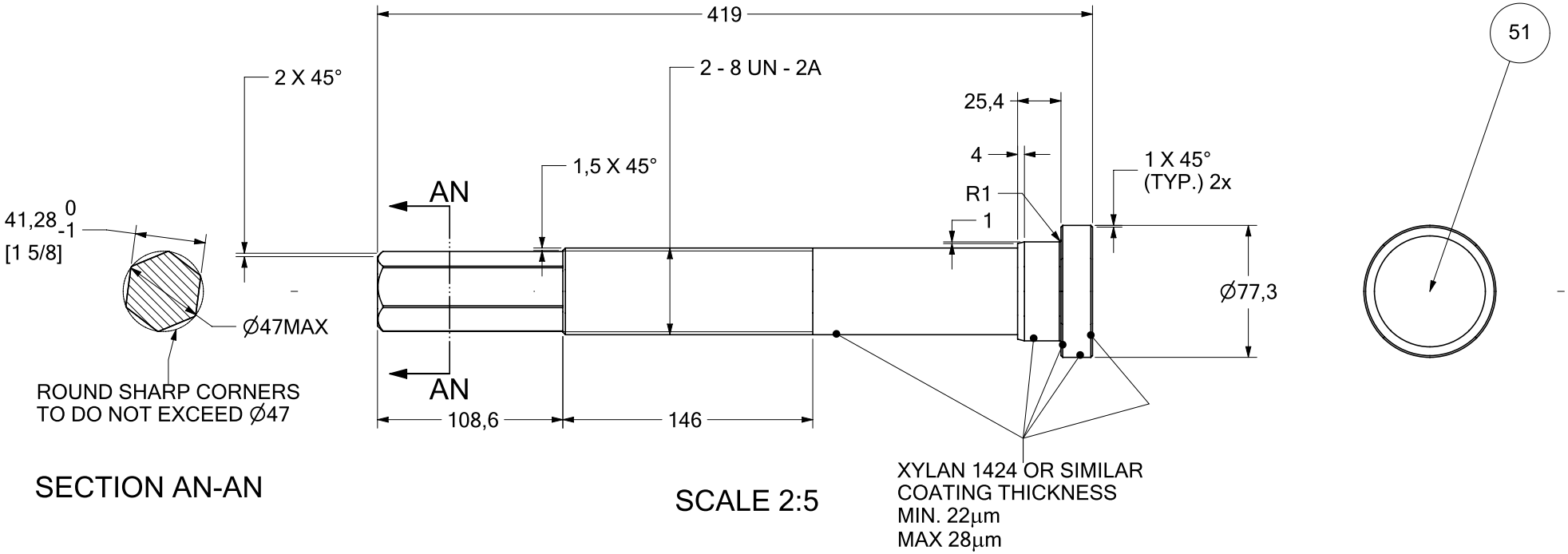

SECTION AN-AN

SCALE 2:5

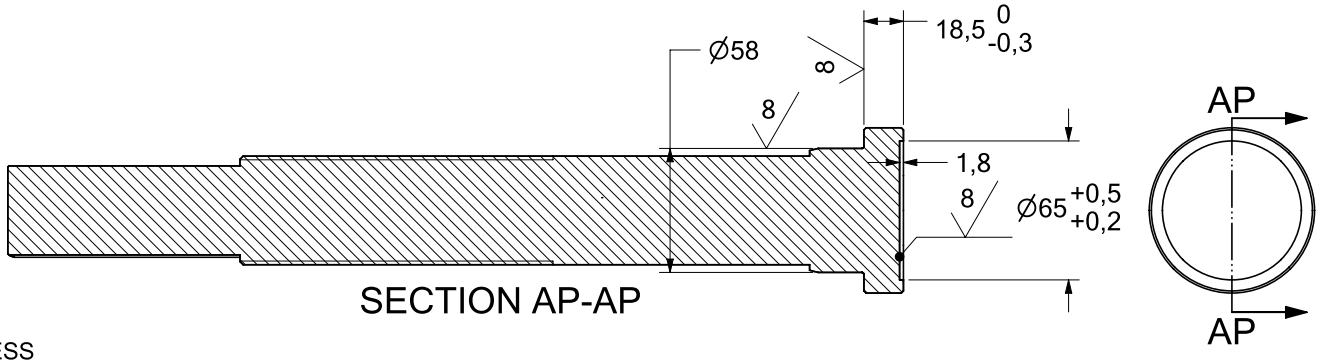

SECTION AP-AP

GENERAL NOTE:
NON SPECIFIED
TOLERANCES (mm):
X. ± 1mm
ANGULAR ± 0° 15'
0.X ± 0,3 mm
0.XX ± 0,1 mm

SURFACE ROUGHNESS
RA (µin) PER ASME B46.1

	REV. 0	REV. A	REV. B	REV. C	REV. D	REV. E	REV. F	REV. G	REV. H	REV. J	REV. K
DATE	23/12/21	30/06/23	24/05/24								
DESIGN	PSUB	PSUB	PSUB								
EXECUTION	CX4H	CX4H	CX4H								
CHECK	CJLZ	U4B8	EVJN								
APPROVAL	BEII	BF6I	BF6I								

PETROBRAS

DRAWING		Nº:	I-DE-3010.00-1300-270-P56-001
CLIENT:	BÚZIOS	SHEET:	25 of 26
JOB:	TSUDL	CC:	
AREA:	BÚZIOS		
TITLE:	LATERAL SUPPORT MODULE - MTL		INTERNO
			SUB/ES/PSUB

FORM OWNED TO PETROBRAS NI-0381 REV. L

INFORMATION IN THIS DOCUMENT IS PROPERTY OF PETROBRAS, BEING PROHIBITED OUTSIDE OF THEIR PURPOSE

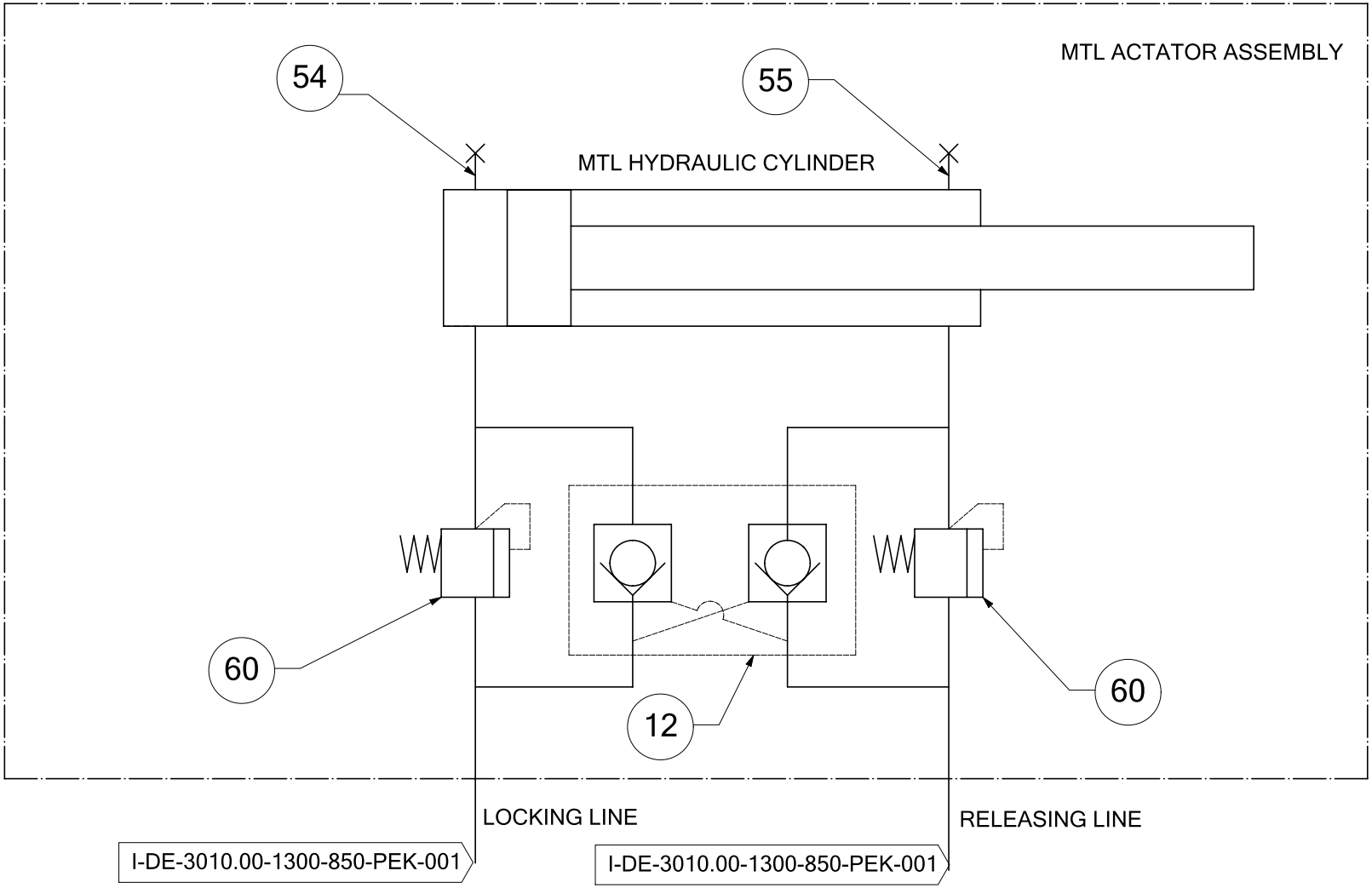

MAXIMUM HYDRAULIC PRESSURE AT
HYDRAULIC PRESSURE UNIT LEVEL : 5000 psi

	REV. 0	REV. A	REV. B	REV. C	REV. D	REV. E	REV. F	REV. G	REV. H	REV. J	REV. K
DATE	23/12/21	30/06/23	24/05/24								
DESIGN	PSUB	PSUB	PSUB								
EXECUTION	CX4H	CX4H	CX4H								
CHECK	CJLZ	U4B8	EVJN								
APPROVAL	BEII	BF6I	BF6I								

PETROBRAS

DRAWING Nº: I-DE-3010.00-1300-270-P56-001

CLIENT: BÚZIOS

SHEET: 26 of 26

JOB: TSUDL

CC:

AREA: BÚZIOS

TITLE: LATERAL SUPPORT MODULE - MTL

INTERNO

SUB/ES/PSUB

FORM OWNED TO PETROBRAS NI-0381 REV. L

INFORMATION IN THIS DOCUMENT IS PROPERTY OF PETROBRAS, BEING PROHIBITED OUTSIDE OF THEIR PURPOSE

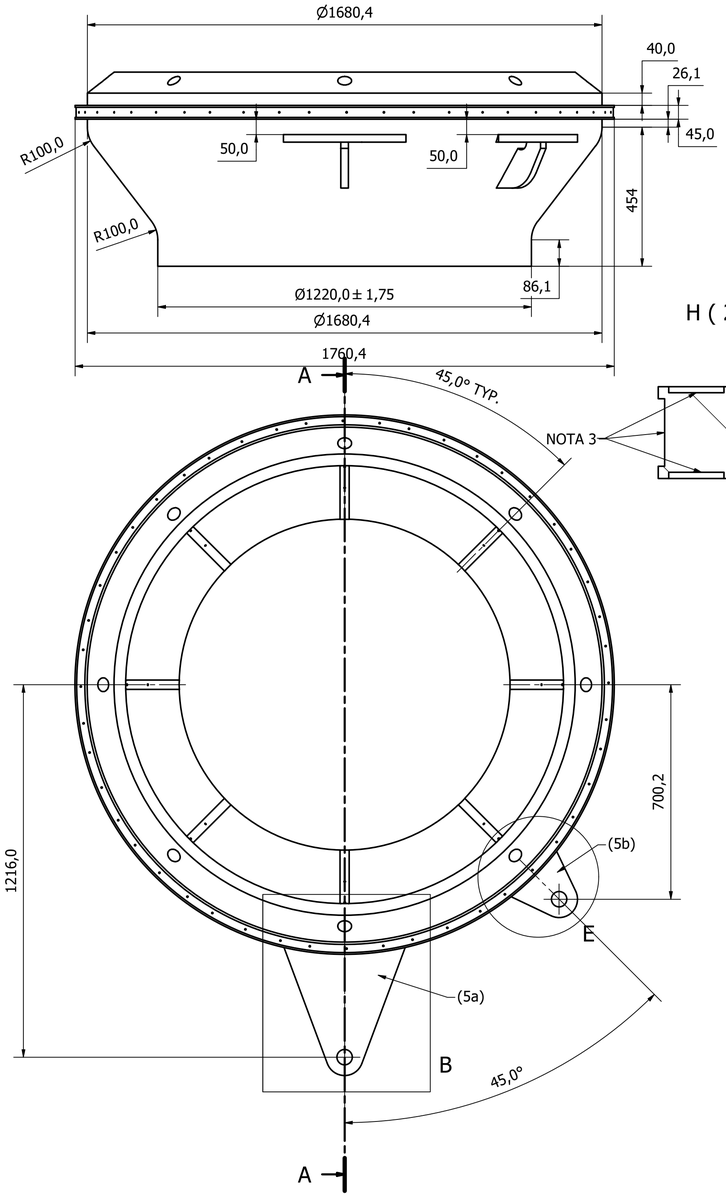

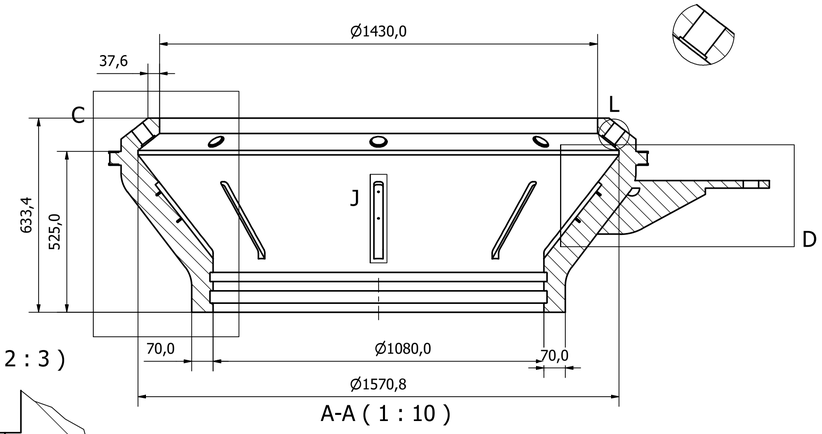

A-A (1 : 10)

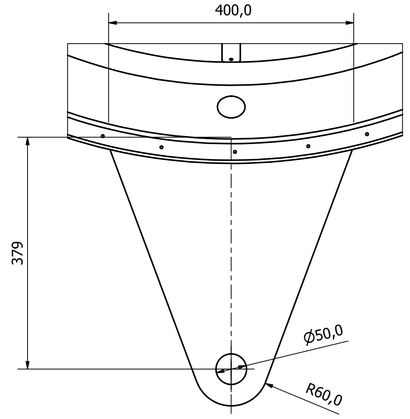

B (1:5)

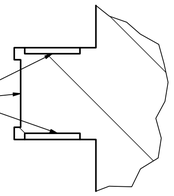

H (2 : 3)

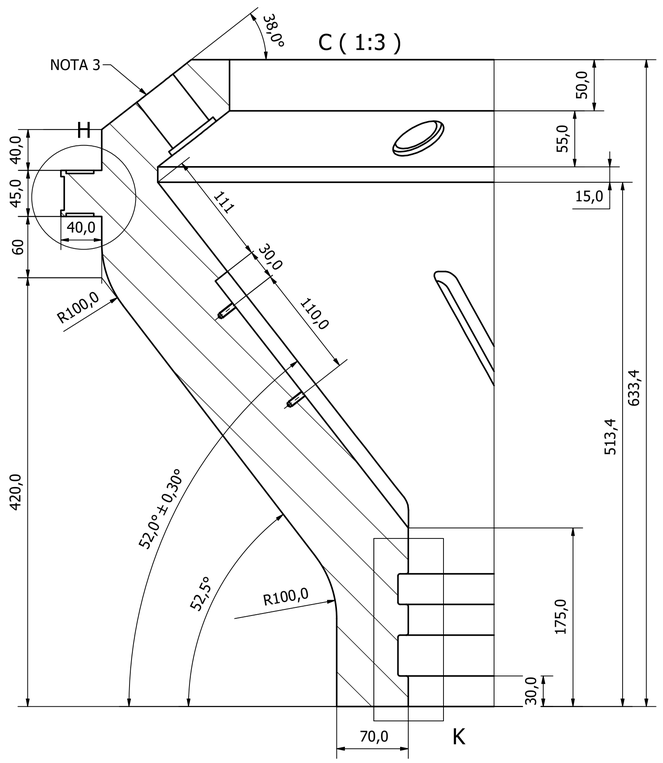

C (1:3)

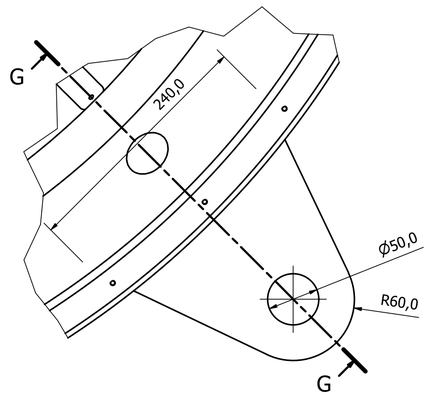

E (1:3)

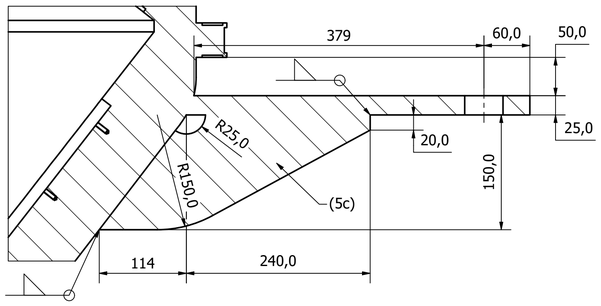

D (1:4)

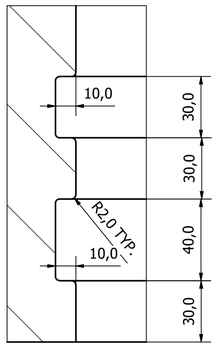

K (2 : 3)

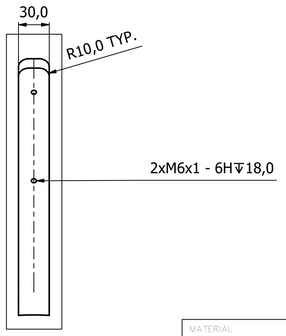

J (1:3)

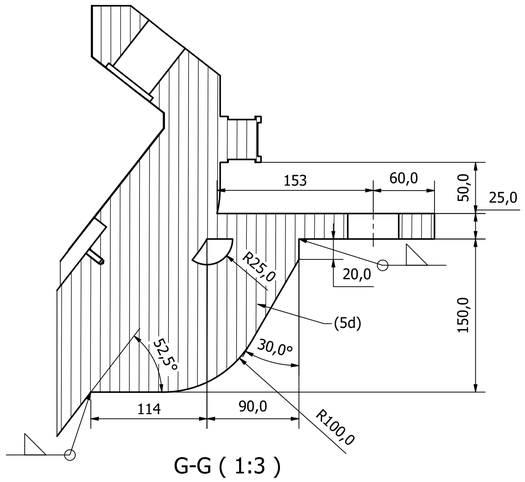

G-G (1:3)

GENERAL NOTES

1- MATERIAL:
(5) DNV RP 0034 SFC3 -
YIELD STRENGHT 355 MPa
TENSILE STRENGHT 455 MPa

(5a)(5b)(5c)(5d) ASTM DH 36

2- WELDS POSITIONS PRESENTED IN DRAWING ARE PRELIMINARY. FINAL POSITION SHALL BE CONFIRMED BY STRUCTURAL CALCULATIONS.

3- APPLY PTFE COATING ON MARKED AREAS. THICKNESS MAX. 50µm.

4- INTERNAL SURFACE COATING WITH ANTIFOULING PAINTING.

REV.	DESCRIPTION	DATE	EXEC.	CHECK	APROV.
C	GENERAL REVISION	20/03/2025	RJR/ES/IOA/EA	CX4H	NTHF
B	GENERAL REVISION	18/09/2023	RTVH	CX4H	BF6I
A	MATERIAL EXCHANGE	08/11/2022	TGG6	CX4H	U4B8
0	ORIGINAL	21/07/2022	RTVH	CX4H	U4B8

ACCORDING TO DI-1PBR-00337, INFORMATION IN THIS DOCUMENT IS PETROBRAS PROPERTY BEING PROHIBITED ITS USE OUTSIDE OF THEIR PURPOSE.
FORM OWNED TO PETROBRAS N-381 REV. M.

PETROBRAS | SUB

CLIENT: E & P
JOB: FPSO UNIT
AREA: PRODUCTION
TITLE: UPPER CONE

TECHNICAL DRAWING
SCALE 1 : 10 | SHEET 1 of 2

INTERNAL
N° I-DE-3010.00-1300-270-P56-006

MATERIAL | RUGOSITY (Ra µm) | SURFACE COATING / TREATMENT

LINEAR DIMENSIONS NOT INDICATED – BOILERMAKING

DIMENSIONS (mm)	DE 2 a 30	>30 a 120	>120 a 400	>400 a 1000	>1000 a 2000	>2000 a 4000	>4000 a 8000	>8000 a 12000
TOLERANCES	± 1	± 3	± 4	± 6	± 8	± 11	± 14	± 18

LINEAR DIMENSIONS NOT INDICATED – MACHINING

DIMENSIONS (mm)	DE 0,1 a 3	>3 a 6	>6 a 30	>30 a 120	>120 a 400	>400 a 1000	>1000 a 2000	>2000 a 4000
LENGHT	± 0,2	± 0,1	± 0,5	± 0,8	± 1,2	± 2,0	± 3,0	± 4,0
DIAMETER	± 0,1	± 0,1	± 0,2	± 0,3	± 0,5	± 0,8	± 1,2	± 2,0

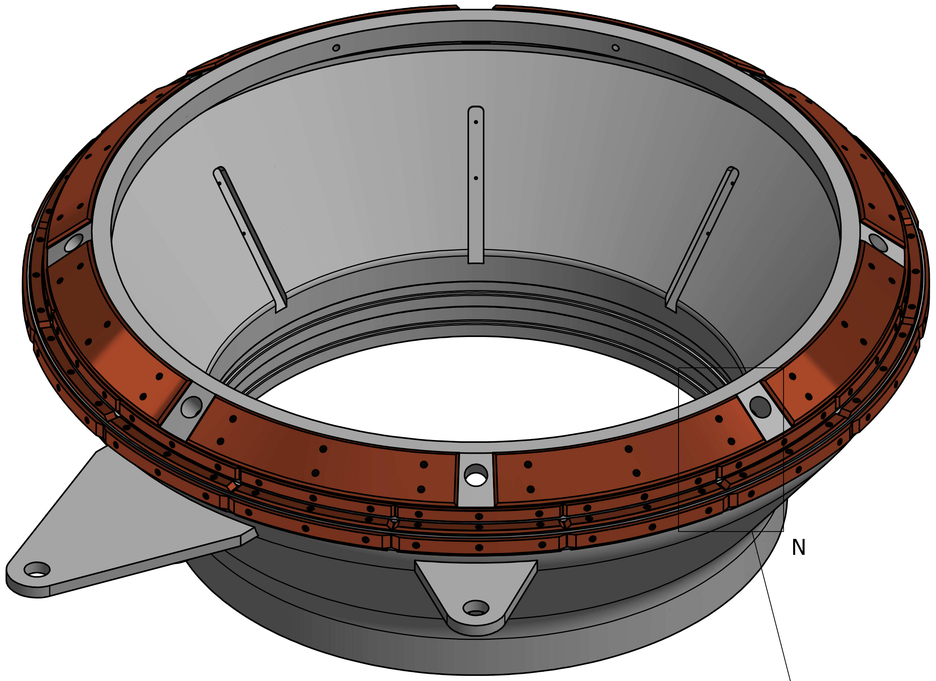

N (1 : 3)

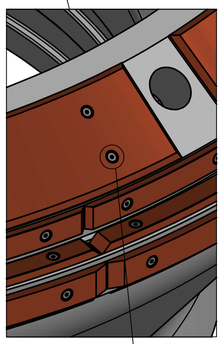

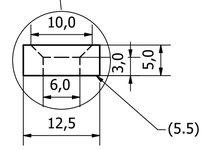

NYLON BUSHING

V (1 : 2)

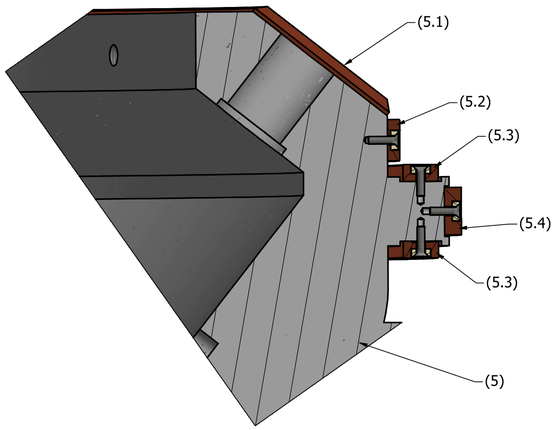

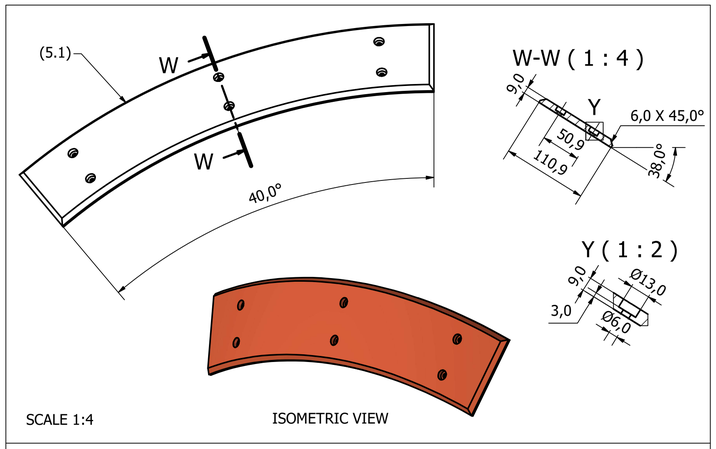

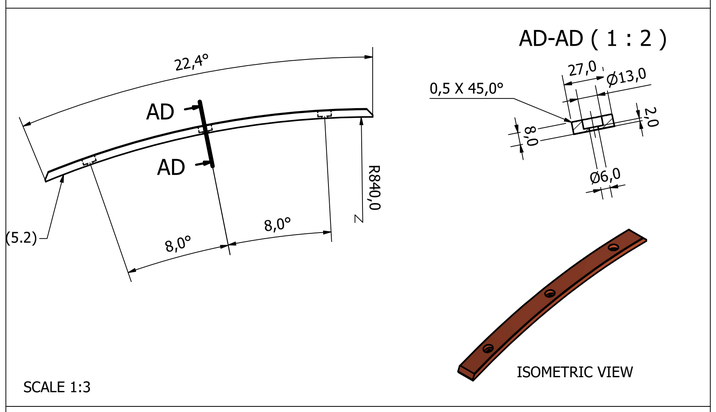

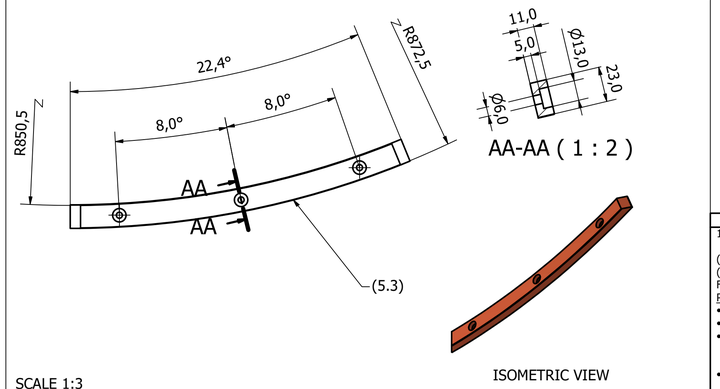

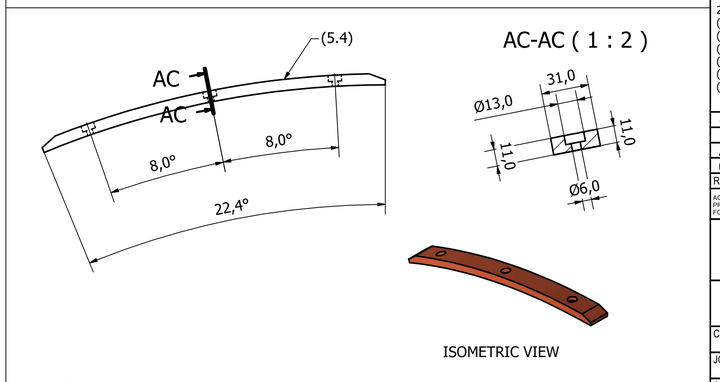

GENERAL NOTES

1- MATERIAL:

(5.1)(5.2)(5.3)(5.4) - UNS-C95500 HT
(5.5) - MATERIAL: THE SELECTED MATERIAL SHALL HAVE FOLLOWING PROPERTIES:
PROPERTIES:

- WATER ABSORPTION (SATURATION) LESS THAN 0.5%;
- RESISTANCE TO ULTRAVIOLET RAYS;
- COEFFICIENT OF FRICTION (STATIC AND DYNAMIC) IN GROUND/POLISHED STEEL LESS THAN 0.3 (EVEN AFTER WATER SATURATION);
- ELECTRICAL INSULATOR;

2- PARTS LIST:
(5) - UPPER CONE
(5.1) - TOP INSUL. RING - x8
(5.2) - TOP RADIAL INSUL. RING - x16
(5.3) - PLAN INSUL. RING - x32
(5.4) - RADIAL INSUL. RING - x16
(5.5) - SCREW BUSHING - x240

REV.	DESCRIPTION	DATE	EXEC.	CHECK	APROV.
C	GENERAL REVISION	20/03/2025	GB/ES/IOA/EAI	CX4H	NTHF
B	GENERAL REVISION	18/09/2023	RTVH	CX4H	BF6I
A	MATERIAL EXCHANGE	08/11/2022	TGG6	CX4H	U4B8
0	ORIGINAL	21/07/2022	RTVH	CX4H	U4B8

ACCORDING TO DI-1PBR-00337, INFORMATION IN THIS DOCUMENT IS PETROBRAS PROPERTY BEING PROHIBITED ITS USE OUTSIDE OF THEIR PURPOSE.
FORM OWNED TO PETROBRAS N-381 REV. M

PETROBRAS | SUB

CLIENT: E & P
JOB: FPSO UNIT
AREA: PRODUCTION
TITLE: UPPER CONE

MATERIAL: SEE GENERAL NOTES
RUGOSITY (Ra µm)
SURFACE COATING / TREATMENT: ANTI-FOULING PAINTING EXCEPT WHERE INDICATED

LINEAR DIMENSIONS NOT INDICATED – BOILERMAKING

DIMENSIONS (mm)	RE 2 a 30	>30 a 120	>120 a 400	>400 a 1000	>1000 a 2000	>2000 a 4000	>4000 a 8000	>8000 a 20000
TOLERANCES	± 1	± 3	± 4	± 6	± 8	± 11	± 14	± 18

LINEAR DIMENSIONS NOT INDICATED – MACHINING

DIMENSIONS (mm)	RE 0,5 a 3	>3 a 6	>6 a 30	>30 a 120	>120 a 400	>400 a 1000	>1000 a 2000	>2000 a 4000
LENGHT	± 0,2	± 0,1	± 0,2	± 0,3	± 1,2	± 2,0	± 3,0	± 4,0
DIAMETER	± 0,1	± 0,1	± 0,2	± 0,3	± 0,5	± 0,8	± 1,2	± 2,0

TECHNICAL DRAWING
SCALE 1 : 6 | SHEET 2 of 2
INTERNAL
N° I -DE-3010.00-1300-270-P56-006

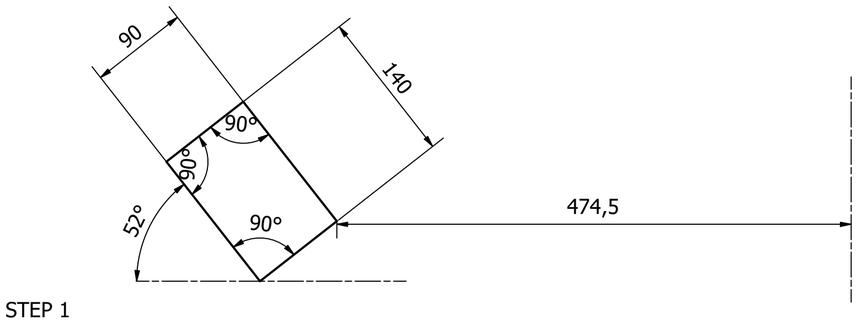

STEP 1

SECTION VIEW

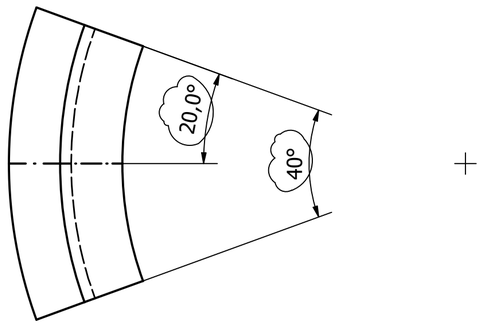

TOP VIEW

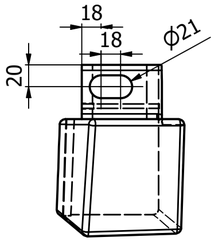

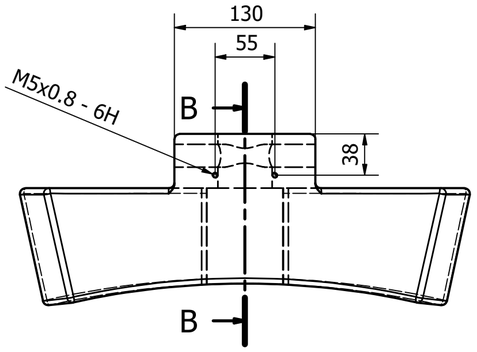

B-B (1 : 4)

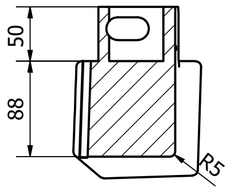

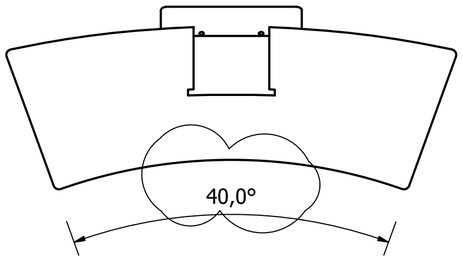

BOTTON VIEW

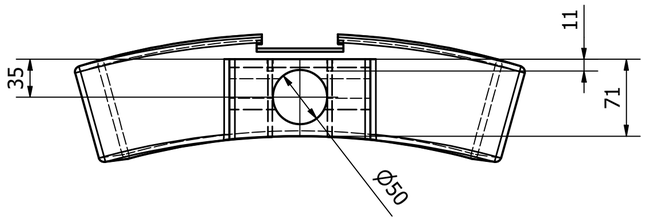

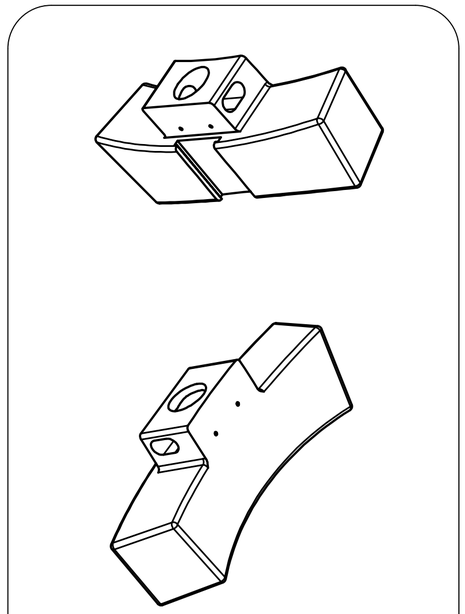

E (1 : 1)

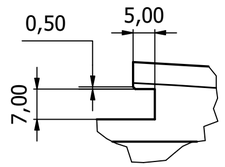

STEP 2

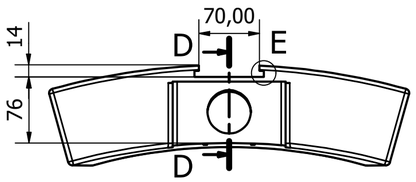

D-D (1 : 5)

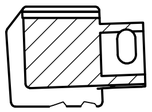

GENERAL NOTES

NOTE 1 - MATERIAL: ASTM A694 F65
YIELD STRENGHT: 450 MPa
ULTIMATE STRENGHT : 530 MPa

NOTE 2 - TSA COATING

REV.	DESCRIPTION	DATE	EXEC.	CHECK	APROV.
B	REVISED WHERE INDICATED	7/2/25	EVJN	CX4H	NTHF
A	GENERAL REVISION	18/9/23	RTVH	CX4H	BF6I
0	INITIAL ISSUE	21/7/22	RTVH	CX4H	U4B8

ACCORDING TO DI-1PBR-00337. INFORMATION IN THIS DOCUMENT IS PETROBRAS PROPERTY BEING PROHIBITED ITS USE OUTSIDE OF THEIR PURPOSE.
FORM OWNED TO PETROBRAS N-381 REV. M.

PETROBRAS

SUB

CLIENT E & P

JOB TSUDL

AREA

TITLE LOCKING WEDGE

AUTODESK INVENTOR® | TECHNICAL DRAWING

FILE: LOCKING WEDGE _PERFIL BASICO.ipt | SCALE 1 : 4 | SHEET 1 of 1

INTERNAL

N° I-DE-3010.00-1300-270-P56-007

A-A (1 : 1)

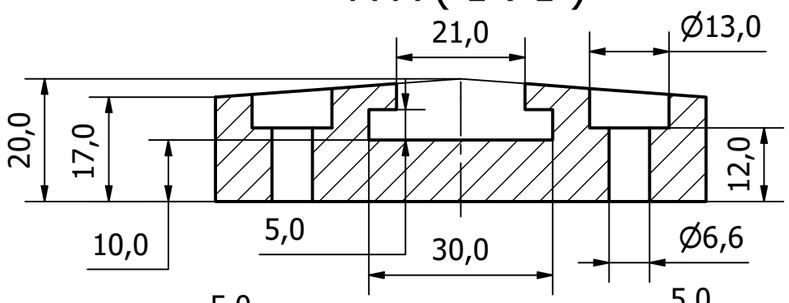

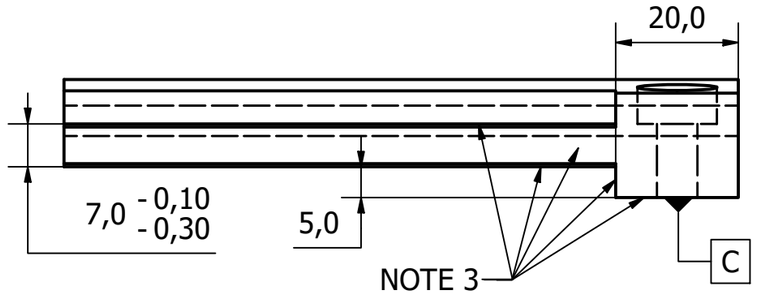

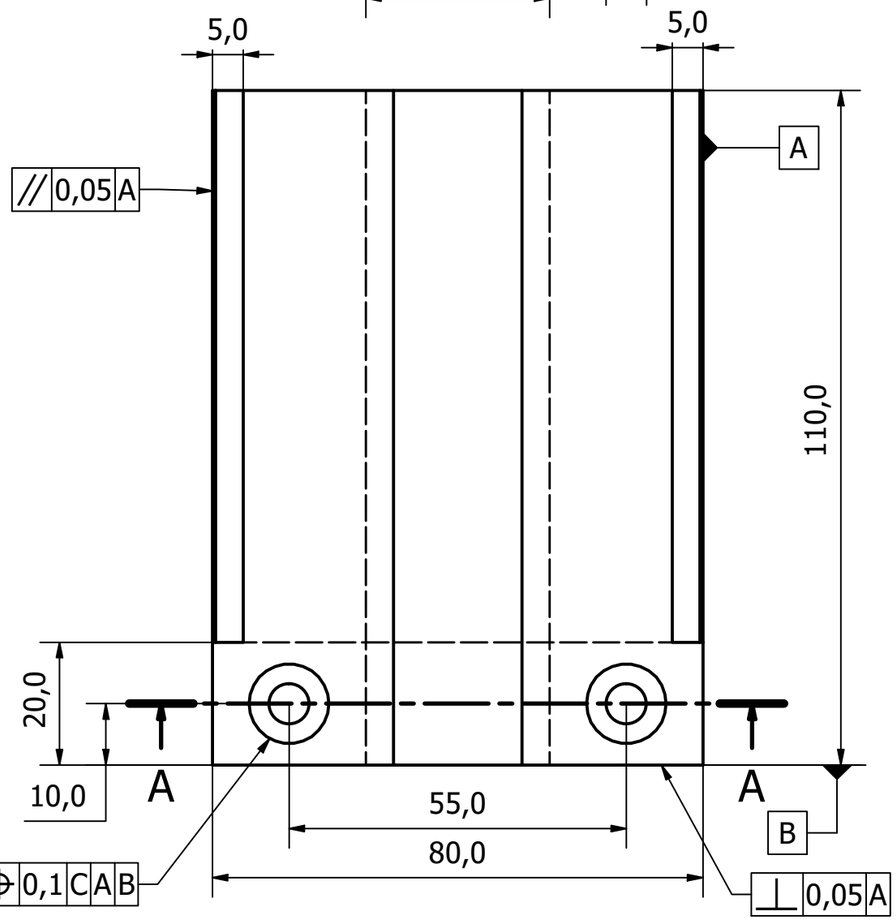

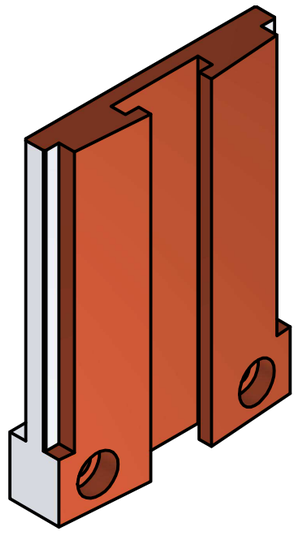

ISOMETRIC VIEW
SCALE 2:3

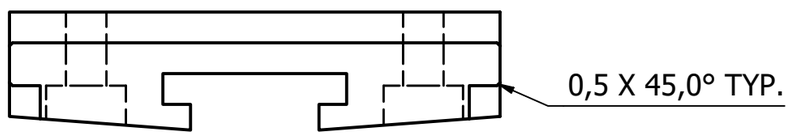

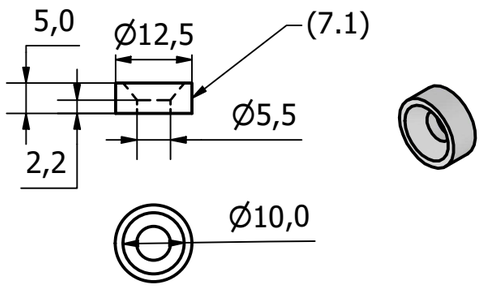

SCREW BUSHING
BASIC DIMENSIONS

GENERAL NOTES

1- CYLINDRICAL SURFACE MUST BE ADJUSTED TO NOT ACHIEVE A DIRECT CONTACT WITH UPPER CONE ON LOCKING WEDGE ASSEMBLY. PRIMARY CONTACT MUST BE MADE BY THE LOCKING WEDGE'S CONICAL SURFACE.

2- PARTS MATERIALS:

(7) LOCKING WEDGE GUIDE - UNS-C95500 HT
(7.1) SCREW BUSHING MATERIAL ACC. TO FOLLOWING REQUIREMENTS:

- WATER ABSORPTION (SATURATION) LESS THAN 0.5%;
- RESISTANCE TO ULTRAVIOLET RAYS;
- COEFFICIENT OF FRICTION (STATIC AND DYNAMIC) IN GROUND/POLISHED STEEL LESS THAN 0.3 (EVEN AFTER WATER SATURATION);
- ELECTRICAL INSULATOR

3- PTFE COATING REQUIRED WHERE INDICATED.

4- ALL SHARP CORNERS MUST BE CHAMFERED.

5- SCREW DIN 7991 - M5 X 25 OR SIMILAR RECOMMENDED TO ATTACH LOCKING WEGDE GUIDE TO LOCKING WEDGE

6-UPDATED DRAWING WILL BE ISSUED IN NOTICE TO PROCEED.

REV.	DESCRIPTION	DATE	EXEC.	CHECK	APROV.
B	GENERAL REVISION	20/03/2025	SUB/ES/EDA/EAI	CX4H	NTHF
A	GENERAL REVISION	18/09/2023	RTVH	CX4H	BF6I
0	INITIAL ISSUE	21/07/2022	RTVH	CX4H	U4B8

ACCORDING TO DI-1PBR-00337, INFORMATION IN THIS DOCUMENT IS PETROBRAS PROPERTY BEING PROHIBITED ITS USE OUTSIDE OF THEIR PURPOSE.
FORM OWNED TO PETROBRAS N-381 REV. M.

PETROBRAS | SUB

CLIENT: E & P
JOB: FPSO UNIT
AREA: PRODUCTION
TITLE: LOCKING WEDGE GUIDE

AUTODESK INVENTOR® | TECHNICAL DRAWING
Wedge Locking Bushing.ipt | SCALE 1 : 1 | SHEET of
INTERNAL
N° I -DE-3010.00-1300-270-P56-008

MATERIAL: SEE NOTE 2
RUGOSITY (C.L.A): 1,6
SURFACE COATING: TSA COATING - EXCEPT WHERE INDICATED
TREATMENT:

LINEAR DIMENSIONS NOT INDICATED – BOILERMAKING

DIMENSIONS (mm)	DE 2 a <30	>30 a <120	>120 a <400	>400 a <1000	>1000 a <2000	>2000 a <4000	>4000 a <8000	>8000 a <12000
TOLERANCES	± 1	± 3	± 4	± 6	± 8	± 11	± 14	± 18

LINEAR DIMENSIONS NOT INDICATED – MACHINING

DIMENSIONS (mm)	DE 0,5 a <3	>3 a <6	>6 a <30	>30 a <120	>120 a <400	>400 a <1000	>1000 a <2000	>2000 a <4000
LENGHT	± 0,2	± 0,3	± 0,5	± 0,8	± 1,2	± 2,0	± 3,0	± 4,0
DIAMETER	± 0,1	± 0,1	± 0,2	± 0,3	± 0,5	± 0,8	± 1,2	± 2,0

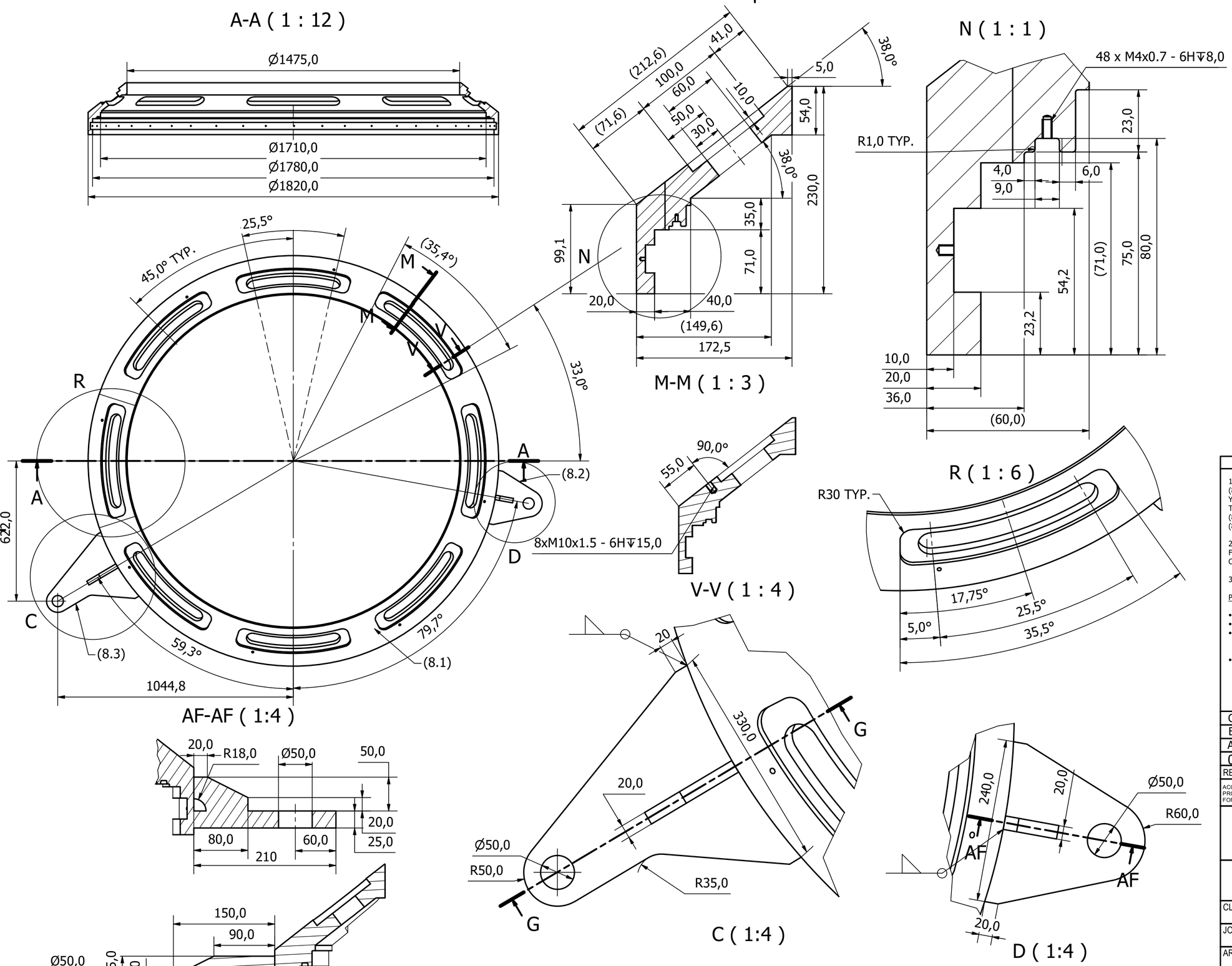

GENERAL NOTES

1. MATERIAL:
(8.1) DNV RP 0034 SFC3
YIELD STRENGHT 355 MPa
TENSILE STRENGHT 455 MPa
(8.2, 8.3, 8.4 & 8.5) ASTM DH 36
(8.6 e 8.7) SEE NOTE 3

2. WELDS POSITIONS PRESENTED IN DRAWING ARE PRELIMINARY. FINAL POSITION SHALL BE CONFIRMED BY STRUCTURAL CALCULATIONS

3. MATERIAL: THE SELECTED MATERIAL SHALL HAVE FOLLOWING PROPERTIES:

PROPERTIES:

- WATER ABSORPTION (SATURATION) LESS THAN 0.5%;
- RESISTANCE TO ULTRAVIOLET RAYS;
- COEFFICIENT OF FRICTION (STATIC AND DYNAMIC) IN GROUND/POLISHED STEEL LESS THAN 0.3 (EVEN AFTER WATER SATURATION);
- ELECTRICAL INSULATOR;

REV.	DESCRIPTION	DATE	EXEC.	CHECK	APROV.
C	GENERAL REVISION	20/02/2025	EVJN	CX4H	NTHF
B	GENERAL REVISION	18/09/2023	RTVH	CX4H	BF6I
A	MATERIAL EXCHANGE	08/11/2022	RTVH	CX4H	U4B8
0	ORIGINAL	21/07/2022	RTVH	CX4H	U4B8

ACCORDING TO DI-1PBR-00337, INFORMATION IN THIS DOCUMENT IS PETROBRAS PROPERTY BEING PROHIBITED ITS USE OUTSIDE OF THEIR PURPOSE.
FORM OWNED TO PETROBRAS N-381 REV. M.

PETROBRAS | SUB

CLIENT: E & P
JOB: FPSO UNIT
AREA: PRODUCTION
TITLE: DRIVE RING

TECHNICAL DRAWING
SCALE 1 : 12 | SHEET 1 of 2
INTERNAL
N° I -DE-3010.00-1300-270-P56-009

MATERIAL: SEE GENERAL NOTES
RUGOSITY (C.L.A.)
SURFACE COATING: ANTIFOULING PAINT
TREATMENT

LINEAR DIMENSIONS NOT INDICATED – BOILERMAKING

DIMENSIONS (mm)	DE 2 a <30	>30 a <120	>120 a <400	>400 a <1000	>1000 a <2000	>2000 a <4000	>4000 a <8000	>8000 a <12000
TOLERANCES	±1	±3	±4	±6	±8	±11	±14	±18

LINEAR DIMENSIONS NOT INDICATED – MACHINING

DIMENSIONS (mm)	DE 0,5 a <3	>3 a <6	>6 a <30	>30 a <120	>120 a <400	>400 a <1000	>1000 a <2000	>2000 a <4000
LENGHT	±0,2	±0,3	±0,5	±0,8	±1,2	±2,0	±3,0	±4,0
DIAMETER	±0,1	±0,1	±0,2	±0,3	±0,5	±0,8	±1,2	±2,0

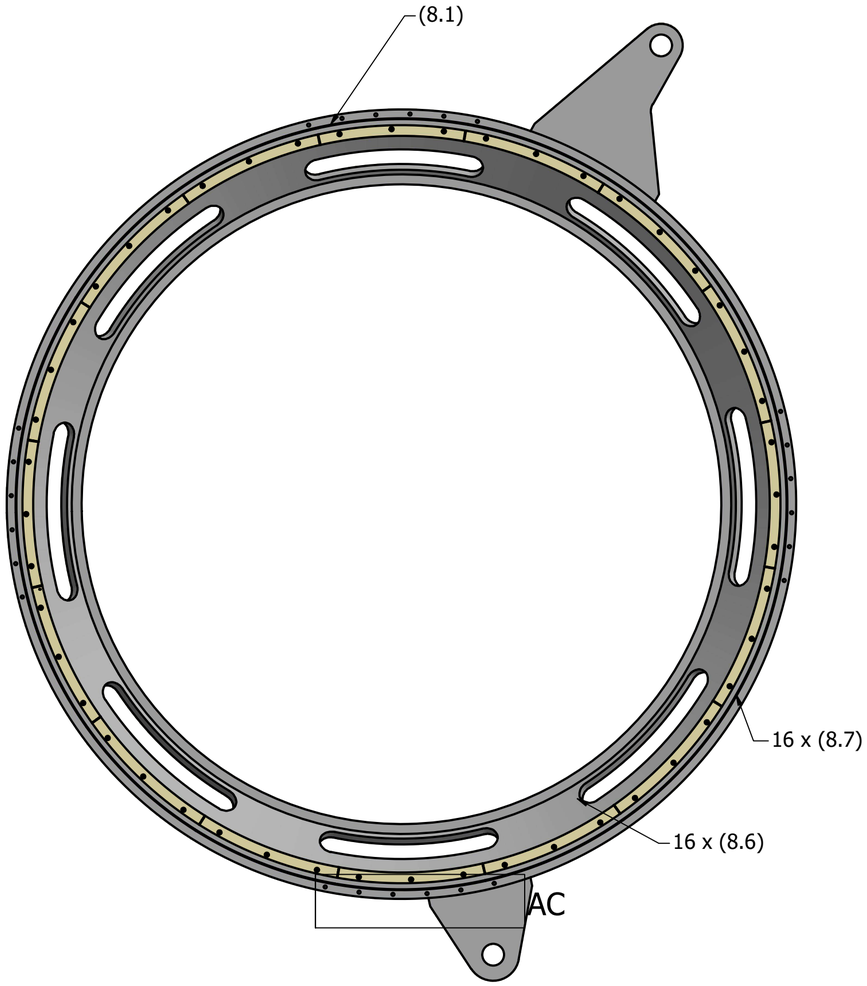

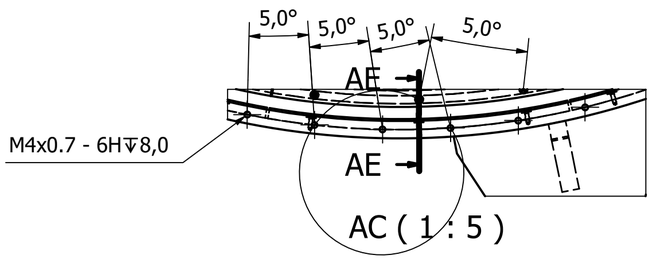

AC (1 : 5)

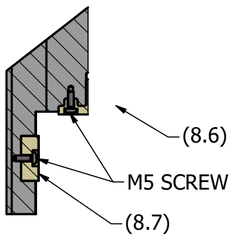

AE-AE (1 : 3)

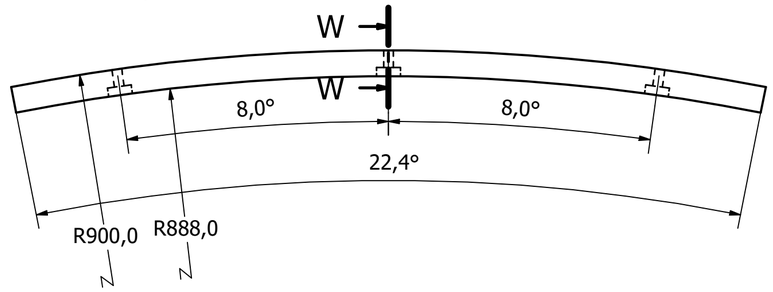

W-W (2:3)

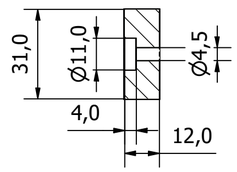

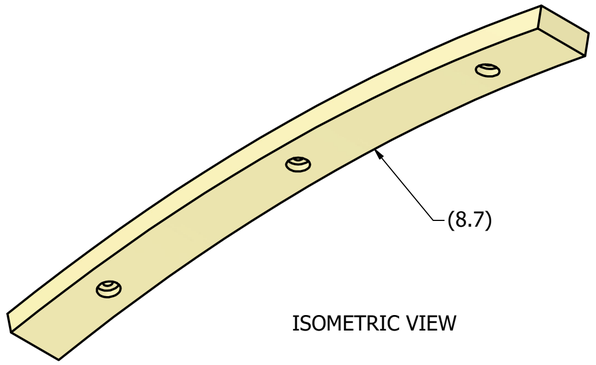

ISOMETRIC VIEW

DRIVE RING - PLASTIC BUSHING 2
SCALE 1 : 2

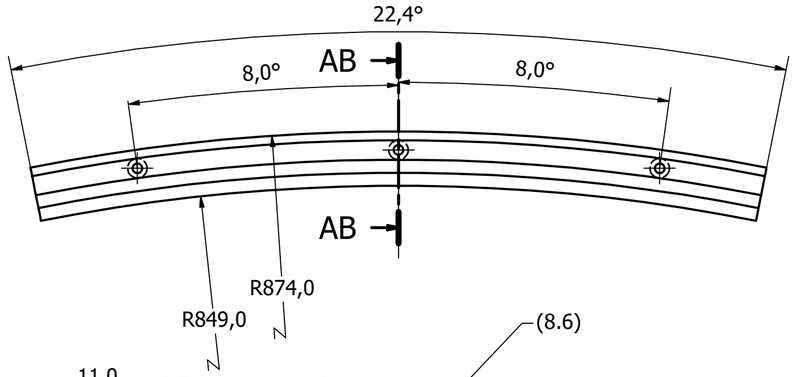

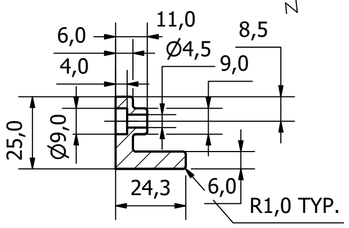

AB-AB (2:3)

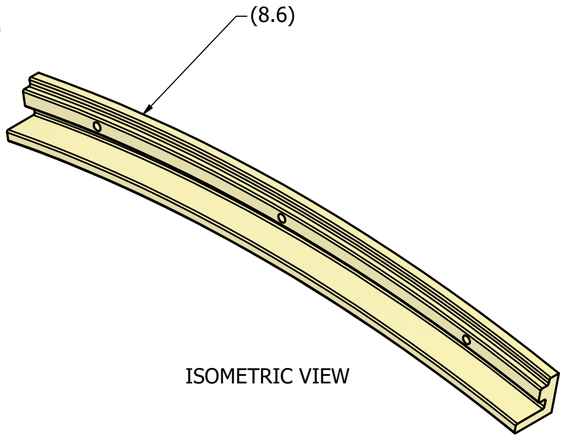

ISOMETRIC VIEW

DRIVE RING - PLASTIC BUSHING 1
SCALE 1 : 2

GENERAL NOTES

1. MATERIAL:

(8.1) DNV RP 0034 SFC3
YIELD STRENGHT 355 MPa
TENSILE STRENGHT 455 MPa

(8.2, 8.3, 8.4 & 8.5) ASTM DH 36

(8.6 e 8.7) SEE NOTE 2

2. MATERIAL: THE SELECTED MATERIAL SHALL HAVE FOLLOWING PROPERTIES:

PROPERTIES:

- WATER ABSORPTION (SATURATION) LESS THAN 0.5%;
- RESISTANCE TO ULTRAVIOLET RAYS;
- COEFFICIENT OF FRICTION (STATIC AND DYNAMIC) IN GROUND/POLISHED STEEL LESS THAN 0.3 (EVEN AFTER WATER SATURATION);
- ELECTRICAL INSULATOR;

REV.	DESCRIPTION	DATE	EXEC.	CHECK	APROV.
C	GENERAL REVISION	20/02/2025	EVJN	CX4H	NTHF
B	GENERAL REVISION	18/09/2023	RTVH	CX4H	BF6I
A	MATERIAL EXCHANGE	08/11/2022	RTVH	CX4H	U4B8
0	ORIGINAL	21/07/2022	RTVH	CX4H	U4B8

ACCORDING TO DI-1PBR-00337, INFORMATION IN THIS DOCUMENT IS PETROBRAS PROPERTY BEING PROHIBITED ITS USE OUTSIDE OF THEIR PURPOSE.
FORM OWNED TO PETROBRAS N-381 REV. M.

PETROBRAS | SUB

CLIENT: E & P
JOB: FPSO UNIT
AREA: PRODUCTION
TITLE: DRIVE RING

MATERIAL: SEE GENERAL NOTES
RUGOSITY (C.L.A): 1,6
SURFACE COATING: ANTIFOULING PAINT (EXCEPT ON 8.6 AND 8.7)
TREATMENT:

LINEAR DIMENSIONS NOT INDICATED – BOILERMAKING

DIMENSIONS (mm)	DE 2 a <30	>30 a <120	>120 a <400	>400 a <1000	>1000 a <2000	>2000 a <4000	>4000 a <8000	>8000 a <12000
TOLERANCES	±1	±3	±4	±6	±8	±11	±14	±18

LINEAR DIMENSIONS NOT INDICATED – MACHINING

DIMENSIONS (mm)	DE 0,5 a <3	>3 a <6	>6 a <30	>30 a <120	>120 a <400	>400 a <1000	>1000 a <2000	>2000 a <4000
LENGHT	±0,2	±0,3	±0,5	±0,8	±1,2	±2,0	±3,0	±4,0
DIAMETER	±0,1	±0,1	±0,2	±0,3	±0,5	±0,8	±1,2	±2,0

TECHNICAL DRAWING
SCALE 1 : 10 | SHEET 2 of 2
INTERNAL
N° I -DE-3010.00-1300-270-P56-009

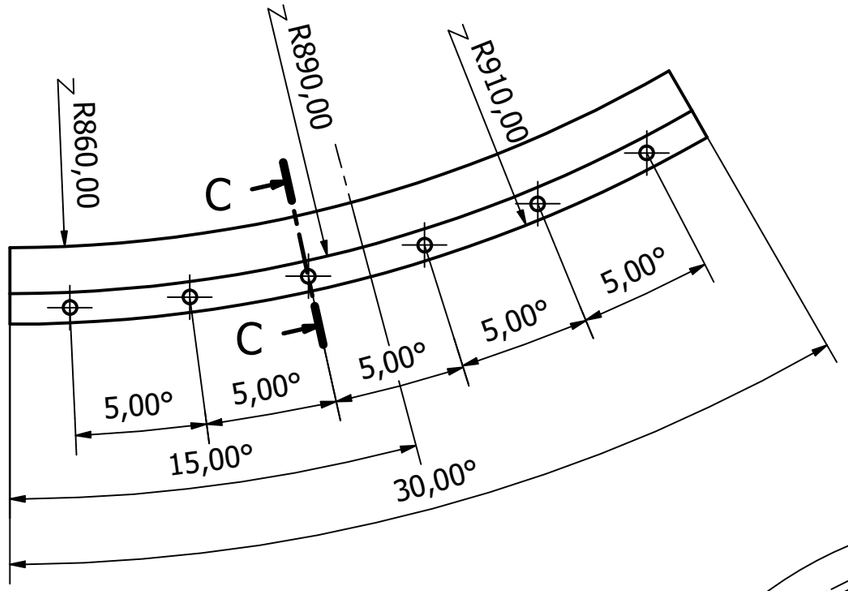

C-C (1 : 2)

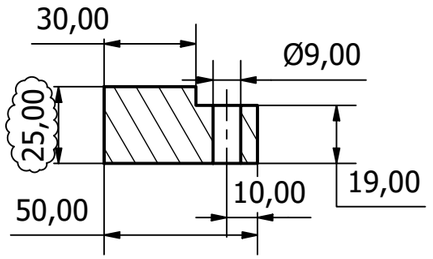

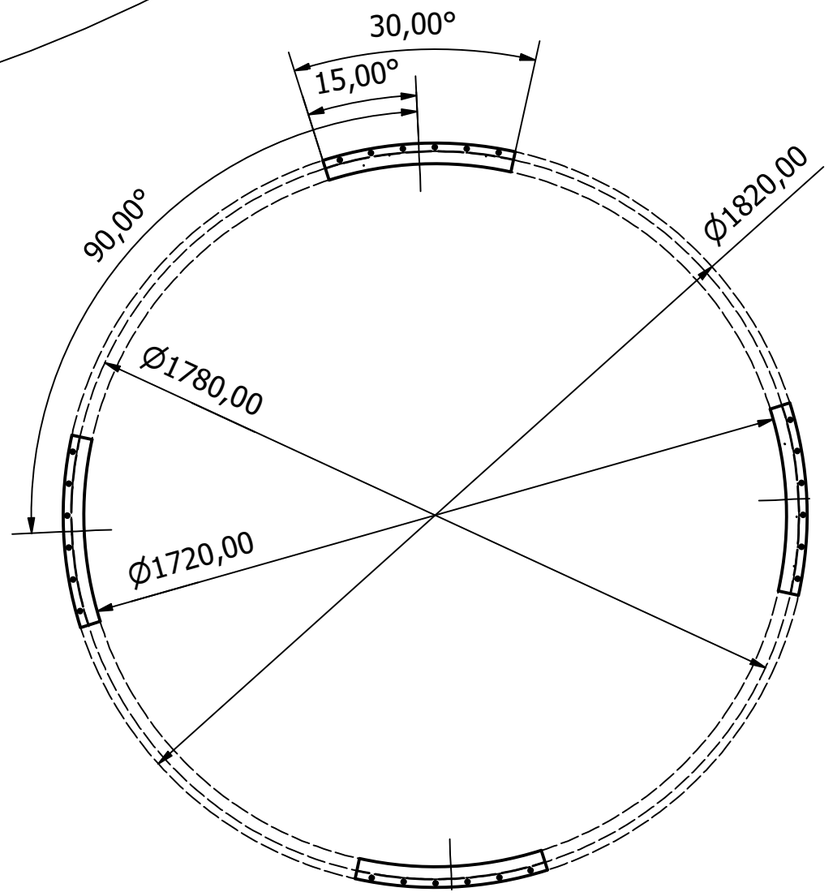

SCALE 1:15

MATERIAL	ASTM DH 36	RUGOSITY (C.L.A) 1,6	SURFACE COATING / TREATMENT	ANTIFOULING

LINEAR DIMENSIONS NOT INDICATED – BOILERMAKING

DIMENSIONS (mm)	DE 2 a <30	>30 a <120	>120 a <400	>400 a <1000	>1000 a <2000	>2000 a <4000	>4000 a <8000	>8000 a <12000
TOLERANCES	± 1	± 3	± 4	± 6	± 8	± 11	± 14	± 18

LINEAR DIMENSIONS NOT INDICATED – MACHINING

DIMENSIONS (mm)	DE 0,5 a <3	>3 a <6	>6 a <30	>30 a <120	>120 a <400	>400 a <1000	>1000 a <2000	>2000 a <4000
LENGHT	± 0,2	± 0,3	± 0,5	± 0,8	± 1,2	± 2,0	± 3,0	± 4,0
DIAMETER	± 0,1	± 0,1	± 0,2	± 0,3	± 0,5	± 0,8	± 1,2	± 2,0

GENERAL NOTES

REV.	DESCRIPTION	DATE	EXEC.	CHECK	APROV.
B	NOTE REMOVED AND DIMENSION UPDATED	10/12/2024	EVJN	CX4H	NTHF
A	GENERAL REVISION	18/09/2023	RTVH	CX4H	BF6I
0	INITIAL ISSUE	21/07/2022	RTVH	CX4H	U4B8

ACCORDING TO DI-1PBR-00337, INFORMATION IN THIS DOCUMENT IS PETROBRAS PROPERTY BEING PROHIBITED ITS USE OUTSIDE OF THEIR PURPOSE.
FORM OWNED TO PETROBRAS N-381 REV. M.

PETROBRAS

SUB

CLIENT E & P

JOB FPSO UNIT

AREA PRODUCTION

TITLE DRIVE RING FLANGE

TECHNICAL DRAWING

SCALE 1 : 4

SHEET of

INTERNAL

N° I-DE-3010.00-1300-270-P56-010

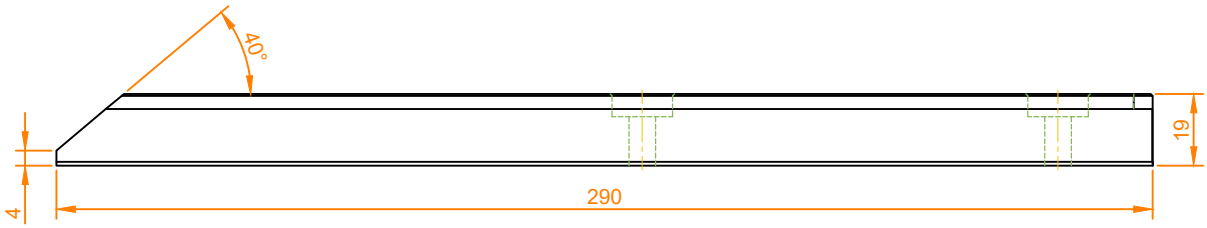

FRONT VIEW
SCALE: 1:2

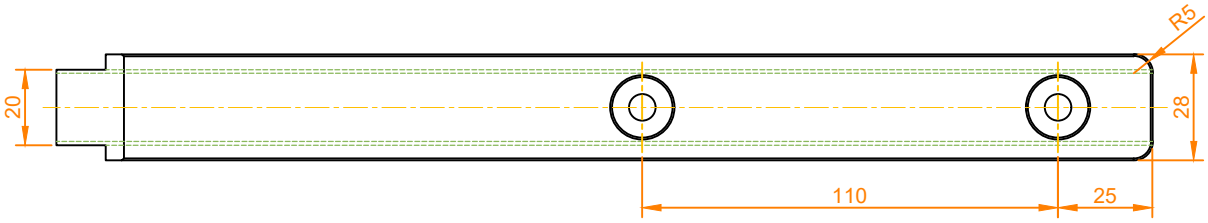

TOP VIEW
SCALE: 1:2

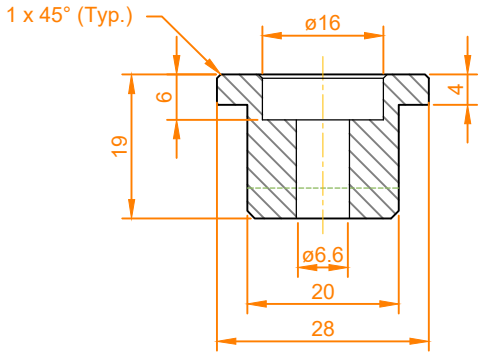

SECTION VIEW
SCALE: 1:1

FEED DESIGN

REV.	DESCRIPTION	DATE	EXEC.	CHECK	APPROV.
A	GENERAL REVISION	18/09/2023	RTVH	CX4H	BF6I
0	INITIAL ISSUE	21/07/2022	RTVH	CX4H	U4B8

GENERAL NOTES

THE DATA, OR PART THEREOF ARE PETROBRAS PROPERTY AND THUS MUST NOT BE USED IN ANY WAY WITHOUT PERMISSION

PETROLEO BRASILEIRO S.A. PETROBRAS

SUB

MATERIAL	WEIGHT	RUGOSITY (C.L.A)
UNS C95500 HT		

LINEAR DIMENSIONS NOT INDICATED - BOILERMAKING

DIMENSIONS (MM)	DE 2 A ≤30	>30 A ≤120	>120 A ≤400	>400 A ≤1000	>1000 A ≤2000	>2000 A ≤4000	>4000 A ≤8000	>8000 A ≤12000
TOLERANCES	±1	±3	±4	±6	±8	±11	±14	±18

SURFACE COATING

TREATMENT

LINEAR DIMENSIONS NOT INDICATED - MACHINING

DIMENSIONS (MM)	DE 0,5 A ≤3	>3 A ≤6	>6 A ≤30	>30 A ≤120	>120 A ≤400	>400 A ≤1000	>1000 A ≤2000	>2000 A ≤4000
LENGHT	±0,2	±0,3	±0,5	±0,8	±1,2	±2,0	±3,0	±4,0
DIAMETER	±0,1	±0,1	±0,2	±0,3	±0,5	±0,8	±1,2	±2,0

CLIENT OR USER	E & P
JOB OR PROJECT	FPSO UNIT
AREA OR UNIT	PRODUCTION
TITLE	GUIDE RAIL

DESIGN	TDUT	DRAWN	RTVH	CHECK	BERK
APPROV.	BF7F	SIZE	A4	CC	
DATE	21/07/2022	SCALE	INDIC.	SHEET	1 of 1

No. I-DE-3010.00-1300-270-P56-011

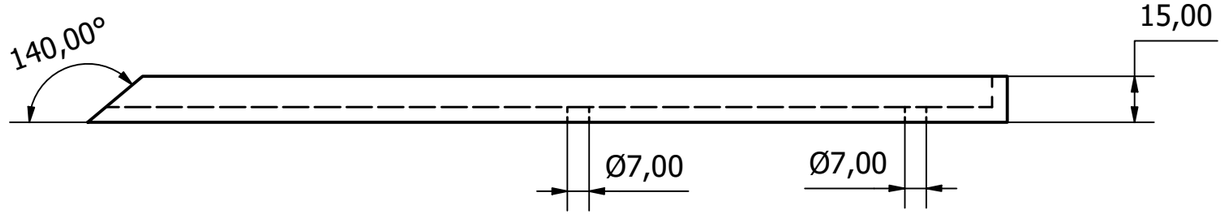

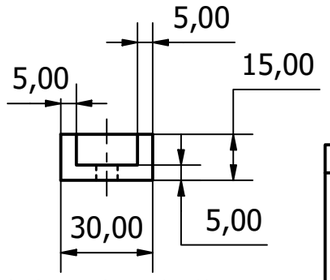

FOR REFERENCE ONLY

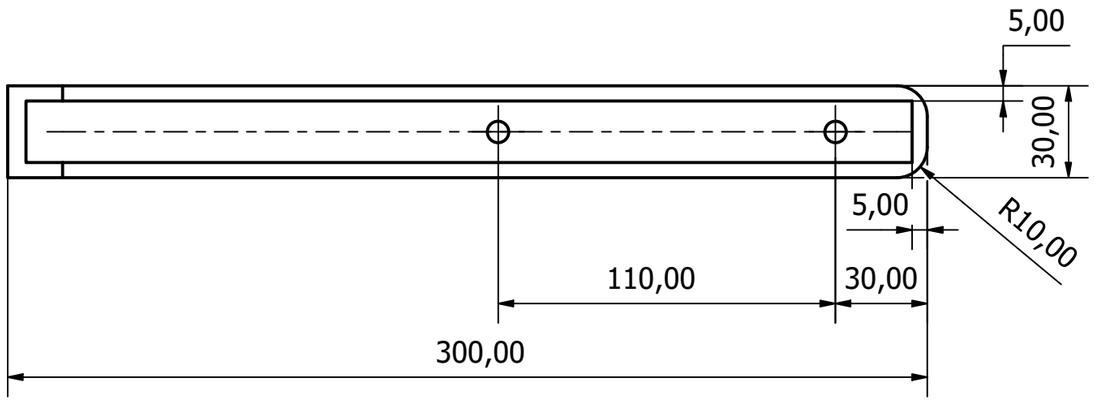

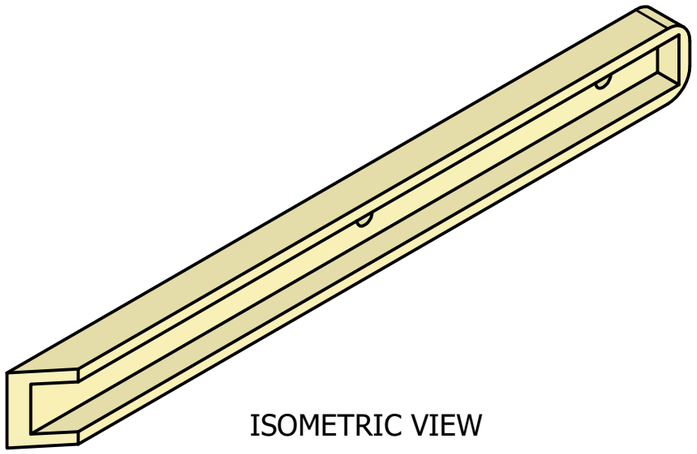

ISOMETRIC VIEW

GENERAL NOTES

MATERIAL: THE SELECTED MATERIAL SHALL HAVE FOLLOWING PROPERTIES:

PROPERTIES:

- WATER ABSORPTION (SATURATION) LESS THAN 0.5%;
- RESISTANCE TO ULTRAVIOLET RAYS;
- COEFFICIENT OF FRICTION (STATIC AND DYNAMIC) IN GROUND/POLISHED STEEL LESS THAN 0.3 (EVEN AFTER WATER SATURATION);
- ELECTRICAL INSULATOR;

REV.	DESCRIPTION	DATE	EXEC.	CHECK	APROV.
B	MATERIAL REVISION	10/12/2024	EVJN	CX4H	NTHF
A	ONE HOLE REMOVED	18/09/2023	RTVH	CX4H	BF6I
0	INITIAL ISSUE	21/07/2022	RTVH	CX4H	U4B8

ACCORDING TO DI-1PBR-00337, INFORMATION IN THIS DOCUMENT IS PETROBRAS PROPERTY BEING PROHIBITED ITS USE OUTSIDE OF THEIR PURPOSE.
FORM OWNED TO PETROBRAS N-381 REV. M.

PETROBRAS

SUB

CLIENT E & P

JOB FPSO UNIT

AREA PRODUCTION

TITLE GUIDE RAIL BUSHING

TECHNICAL DRAWING

SCALE 1 : 2 SHEET of

INTERNAL

N° I-DE-3010.00-1300-270-P56-012

MATERIAL SEE GENERAL NOTES

RUGOSITY (C.L.A) 1,6

SURFACE COATING

TREATMENT

LINEAR DIMENSIONS NOT INDICATED – BOILERMAKING

DIMENSIONS (mm)	DE 2 a <30	>30 a <120	>120 a <400	>400 a <1000	>1000 a <2000	>2000 a <4000	>4000 a <8000	>8000 a <12000
TOLERANCES	± 1	± 3	± 4	± 6	± 8	± 11	± 14	± 18

LINEAR DIMENSIONS NOT INDICATED – MACHINING

DIMENSIONS (mm)	DE 0,5 a <3	>3 a <6	>6 a <30	>30 a <120	>120 a <400	>400 a <1000	>1000 a <2000	>2000 a <4000
LENGHT	± 0,2	± 0,3	± 0,5	± 0,8	± 1,2	± 2,0	± 3,0	± 4,0
DIAMETER	± 0,1	± 0,1	± 0,2	± 0,3	± 0,5	± 0,8	± 1,2	± 2,0

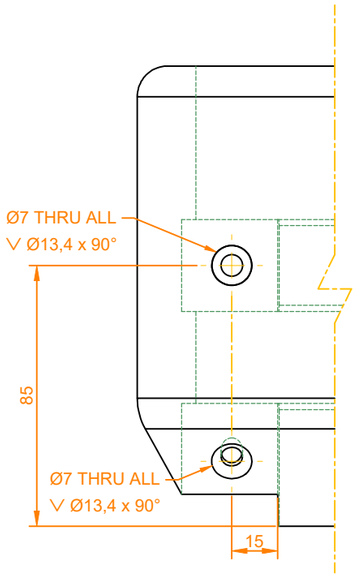

FRONT VIEW
(REF. DETAIL 1)
SCALE: 1:2

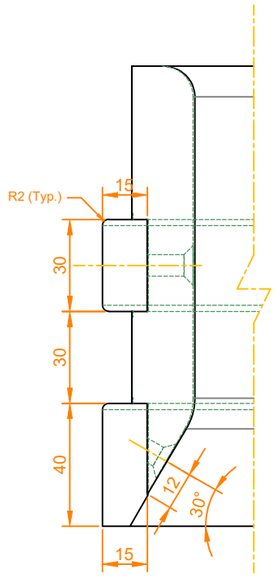

SIDE VIEW
(REF. DETAIL 1)
SCALE: 1:2

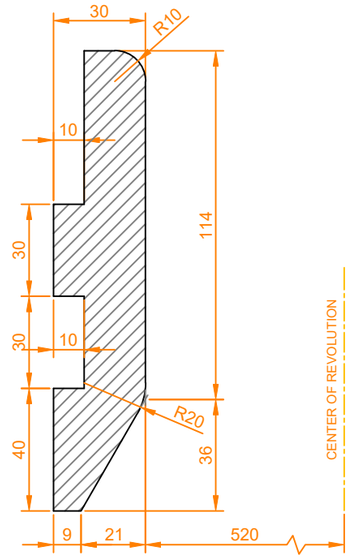

SECTION VIEW
SCALE: 1:2

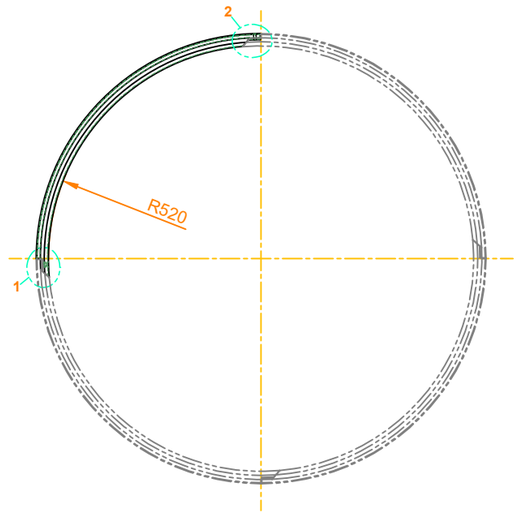

ASSEMBLY
SCALE: 1:15

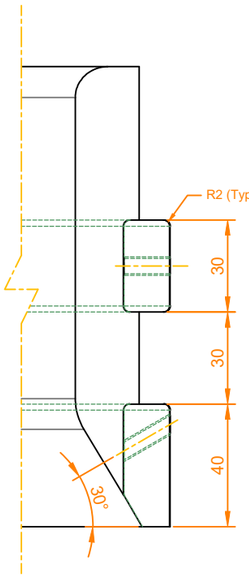

SIDE VIEW
(REF. DETAIL 2)
SCALE: 1:2

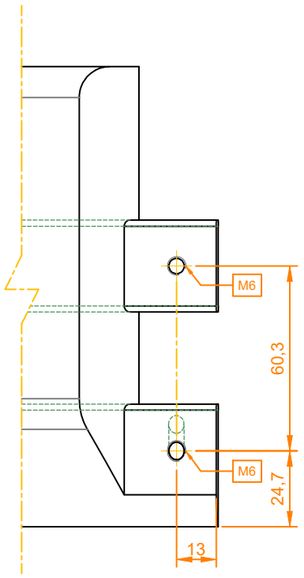

FRONT VIEW
(REF. DETAIL 2)
SCALE: 1:2

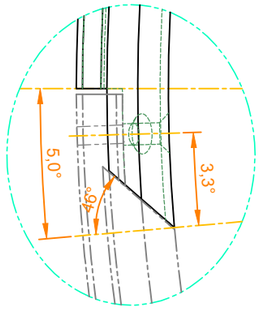

DETAIL 1
SCALE: 1:2

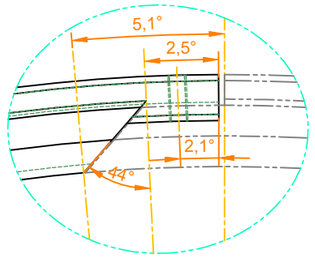

DETAIL 2
SCALE: 1:2

PERSPECTIVE
SCALE: 1:10

MATERIAL	WEIGHT	RUGOSITY (RA)	SURFACE COATING / TREATMENT
SEE REF. DOC. #1			ANTIFOULING

LINEAR DIMENSIONS NOT INDICATED - BOILERMAKING

DIMENSIONS (MM)	DE 2 A ≤30	>30 A ≤120	>120 A ≤400	>400 A ≤1000	>1000 A ≤2000	>2000 A ≤4000	>4000 A ≤8000	>8000 A ≤12000
TOLERANCES	±1	±3	±4	±6	±8	±11	±14	±18

LINEAR DIMENSIONS NOT INDICATED - MACHINING

DIMENSIONS (MM)	DE 0,5 A ≤3	>3 A ≤6	>6 A ≤30	>30 A ≤120	>120 A ≤400	>400 A ≤1000	>1000 A ≤2000	>2000 A ≤4000
LENGHT	±0,2	±0,3	±0,5	±0,8	±1,2	±2,0	±3,0	±4,0
DIAMETER	±0,1	±0,1	±0,2	±0,3	±0,5	±0,8	±1,2	±2,0

REFERENCE DOCUMENTS

1- I-ET-3010.00-1519-140-PPC-001

GENERAL NOTES

FEED DESIGN

REV.	DESCRIPTION	DATE	EXEC.	CHECK	APPROV.
A	GENERAL REVISION	18/09/2023	RTVH	CX4H	BF6I
0	INITIAL ISSUE	21/07/2022	RTVH	CX4H	U4B8

THE DATA, OR PART THEREOF ARE PETROBRAS PROPERTY AND THUS MUST NOT BE USED IN ANY WAY WITHOUT PERMISSION

PETROLEO BRASILEIRO S.A. PETROBRAS

SUB

CLIENT OR USER: E & P

JOB OR PROJECT: FPSO UNIT

AREA OR UNIT: PRODUCTION

TITLE: PULL-IN WEAR BUSHING

DESIGN	DRAWN	CHECK
TDUT	RTVH	BERK
APPROV. BF7F	SIZE A3	CC
DATE 21/07/2022	SCALE INDIC.	SHEET 1 of 1

No. I-DE-3010.00-1300-270-P56-013

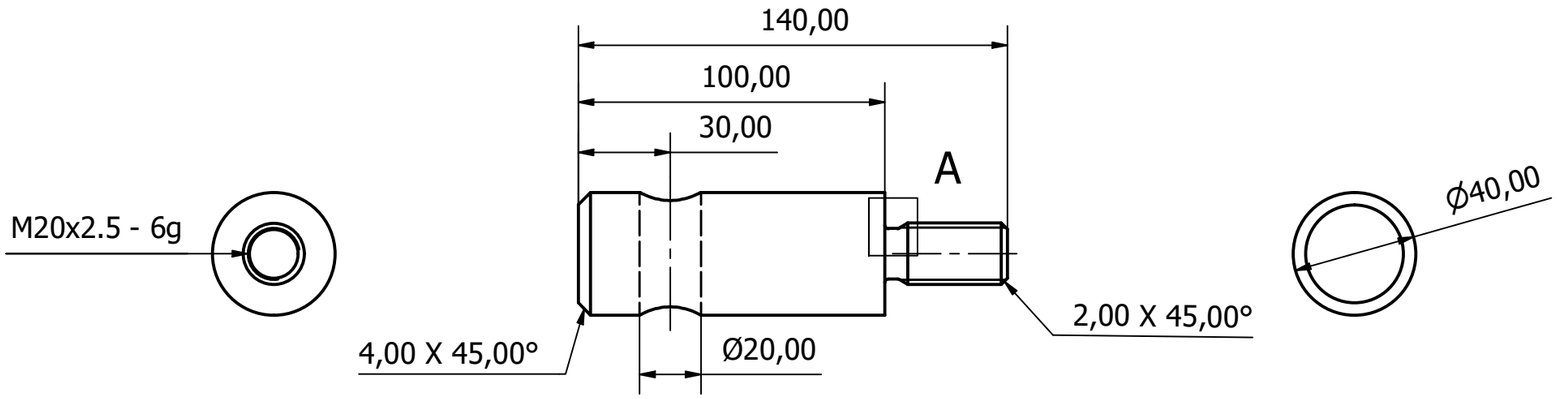

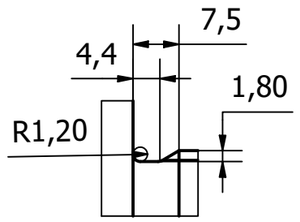

A (1 : 1)

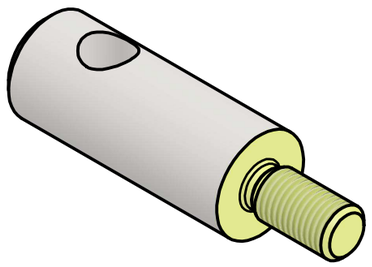

ISOMETRIC VIEW

GENERAL NOTES

1) MATERIAL: AISI 4140 QUENCHED AND TEMPERED

- MAXIMUM HARDNESS 32 HRC
- MINIMUM HARDNESS 26 HRC
- MINIMUM YIELD STRENGTH: 725 MPA
- MINIMUM ULTIMATE TENSILE STRENGTH: 860 MPA

REV.	DESCRIPTION	DATE	EXEC.	CHECK	APROV.
B	GENERAL REVISION	10/12/2024	EVJN	CX4H	NTHF
A	TOTAL LENGHT AND THREAD DIMENSIONS	18/09/2023	RTVH	CX4H	BF6I
0	INITIAL ISSUE	21/07/2022	RTVH	CX4H	U4B8

ACCORDING TO DI-1PBR-00337, INFORMATION IN THIS DOCUMENT IS PETROBRAS PROPERTY BEING PROHIBITED ITS USE OUTSIDE OF THEIR PURPOSE.
FORM OWNED TO PETROBRAS N-381 REV. M.

PETROBRAS

SUB

CLIENT E & P

JOB FPSO UNIT

AREA PRODUCTION

TITLE SHAFT FEMALE

TECHNICAL DRAWING

SCALE 1 : 2

SHEET of

INTERNAL

N° I-DE-3010.00-1300-270-P56-014

MATERIAL SEE GENERAL NOTES

RUGOSITY (C.L.A) 1,6

SURFACE COATING TSA COATING (EXCEPT THREAD)

TREATMENT

LINEAR DIMENSIONS NOT INDICATED – BOILERMAKING

DIMENSIONS (mm)	DE 2 a <30	>30 a <120	>120 a <400	>400 a <1000	>1000 a <2000	>2000 a <4000	>4000 a <8000	>8000 a <12000
TOLERANCES	± 1	± 3	± 4	± 6	± 8	± 11	± 14	± 18

LINEAR DIMENSIONS NOT INDICATED – MACHINING

DIMENSIONS (mm)	DE 0,5 a <3	>3 a <6	>6 a <30	>30 a <120	>120 a <400	>400 a <1000	>1000 a <2000	>2000 a <4000
LENGHT	± 0,2	± 0,3	± 0,5	± 0,8	± 1,2	± 2,0	± 3,0	± 4,0
DIAMETER	± 0,1	± 0,1	± 0,2	± 0,3	± 0,5	± 0,8	± 1,2	± 2,0

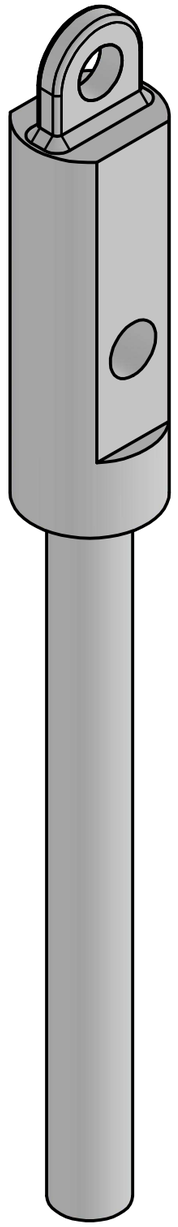

ISOMETRIC VIEW

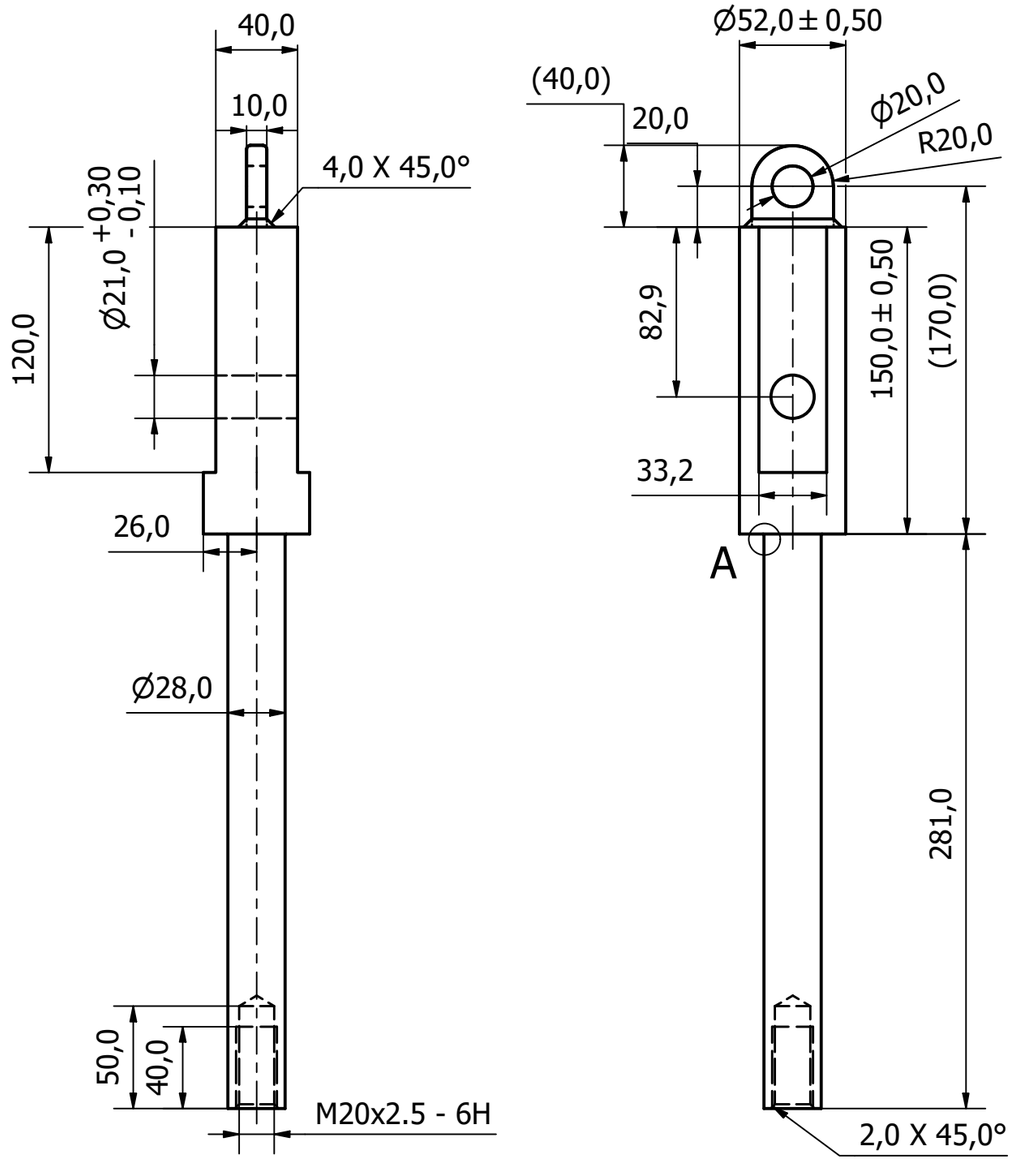

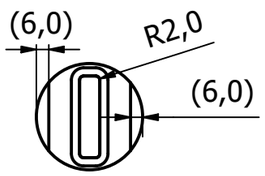

A (1 : 1)

GENERAL NOTES

1) MATERIAL: AISI 4140 QUENCHED AND TEMPERED

- MAXIMUM HARDNESS 32 HRC
- MINIMUM HARDNESS 26 HRC
- MINIMUM YIELD STRENGTH: 725 MPA
- MINIMUM ULTIMATE TENSILE STRENGTH: 860 MPA

REV.	DESCRIPTION	DATE	EXEC.	CHECK	APROV.
B	GENERAL REVISION	20/02/2025	EVJN	CX4H	NTHF
A	GENERAL REVISION	18/09/2023	RTVH	CX4H	BF6I
0	INITIAL ISSUE	21/07/2022	RTVH	CX4H	U4B8

ACCORDING TO DI-1PBR-00337, INFORMATION IN THIS DOCUMENT IS PETROBRAS PROPERTY BEING PROHIBITED ITS USE OUTSIDE OF THEIR PURPOSE.
FORM OWNED TO PETROBRAS N-381 REV. M.

PETROBRAS

SUB

CLIENT E & P

JOB FPSO UNIT

AREA PRODUCTION

TITLE SHAFT (MALE)

TECHNICAL DRAWING

SCALE 1 : 3

SHEET 1 of 2

INTERNAL

N° I-DE-3010.00-1300-270-P56-015

MATERIAL SEE GENERAL NOTES

RUGOSITY (C.L.A) 1,6

SURFACE COATING TREATMENT TSA COATING (EXCEPT THREAD)

LINEAR DIMENSIONS NOT INDICATED – BOILERMAKING

DIMENSIONS (mm)	DE 2 a <30	>30 a <120	>120 a <400	>400 a <1000	>1000 a <2000	>2000 a <4000	>4000 a <8000	>8000 a <12000
TOLERANCES	± 1	± 3	± 4	± 6	± 8	± 11	± 14	± 18

LINEAR DIMENSIONS NOT INDICATED – MACHINING

DIMENSIONS (mm)	DE 0,5 a <3	>3 a <6	>6 a <30	>30 a <120	>120 a <400	>400 a <1000	>1000 a <2000	>2000 a <4000
LENGHT	± 0,2	± 0,3	± 0,5	± 0,8	± 1,2	± 2,0	± 3,0	± 4,0
DIAMETER	± 0,1	± 0,1	± 0,2	± 0,3	± 0,5	± 0,8	± 1,2	± 2,0

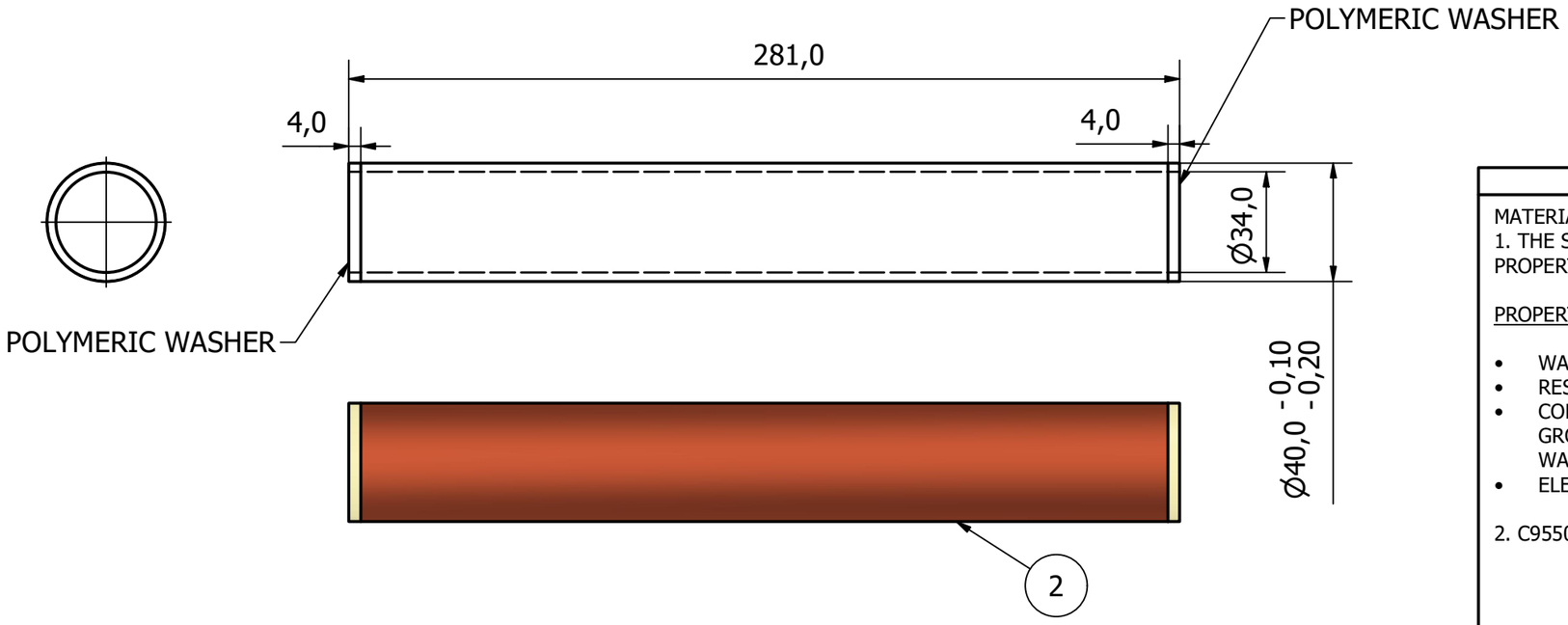

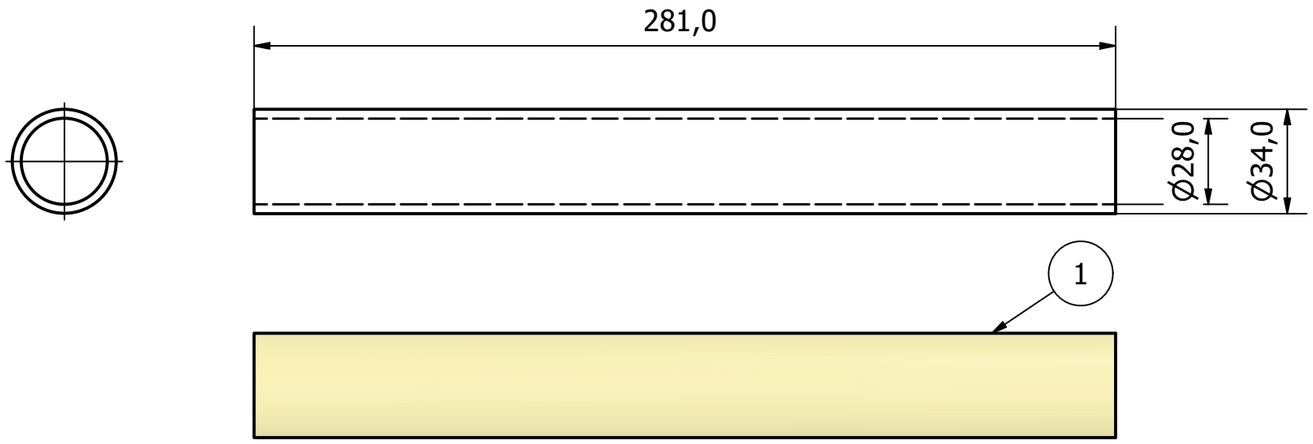

GENERAL NOTES

MATERIAL:
1. THE SELECTED MATERIAL SHALL HAVE FOLLOWING PROPERTIES:

PROPERTIES:

- WATER ABSORPTION (SATURATION) LESS THAN 0.5%;
- RESISTANCE TO ULTRAVIOLET RAYS;
- COEFFICIENT OF FRICTION (STATIC AND DYNAMIC) IN GROUND/POLISHED STEEL LESS THAN 0.3 (EVEN AFTER WATER SATURATION);
- ELECTRICAL INSULATOR;

2. C95500 HT

REV.	DESCRIPTION	DATE	EXEC.	CHECK	APROV.
B	GENERAL REVISION	20/03/2025	EVJN	CX4H	NTHF
A	GENERAL REVISION	18/09/2023	RTVH	CX4H	BF6I
0	INITIAL ISSUE	21/07/2022	RTVH	CX4H	U4B8

ACCORDING TO DI-1PBR-00337, INFORMATION IN THIS DOCUMENT IS PETROBRAS PROPERTY BEING PROHIBITED ITS USE OUTSIDE OF THEIR PURPOSE.
FORM OWNED TO PETROBRAS N-381 REV. M.

PETROBRAS

SUB

CLIENT E & P

JOB FPSO UNIT

AREA PRODUCTION

TITLE SHAFT MALE TUBES

TECHNICAL DRAWING

SCALE

SHEET 2 of 2

INTERNAL

N° I-DE-3010.00-1300-270-P56-015

MATERIAL SEE GENERAL NOTES

RUGOSITY (C.L.A) 1,6

SURFACE COATING

TREATMENT

LINEAR DIMENSIONS NOT INDICATED – BOILERMAKING

DIMENSIONS (mm)	DE 2 a <30	>30 a <120	>120 a <400	>400 a <1000	>1000 a <2000	>2000 a <4000	>4000 a <8000	>8000 a <12000
TOLERANCES	±1	±3	±4	±6	±8	±11	±14	±18

LINEAR DIMENSIONS NOT INDICATED – MACHINING

DIMENSIONS (mm)	DE 0,5 a <3	>3 a <6	>6 a <30	>30 a <120	>120 a <400	>400 a <1000	>1000 a <2000	>2000 a <4000
LENGHT	±0,2	±0,3	±0,5	±0,8	±1,2	±2,0	±3,0	±4,0
DIAMETER	±0,1	±0,1	±0,2	±0,3	±0,5	±0,8	±1,2	±2,0

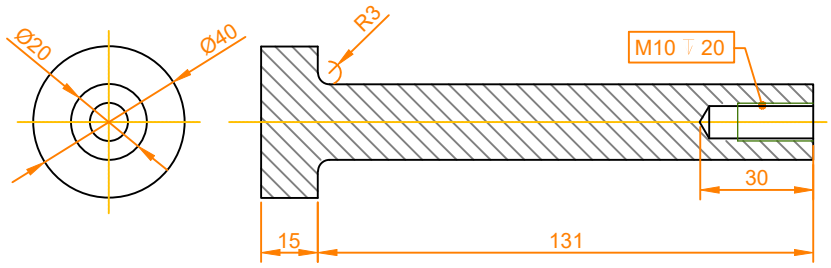

PIN

SCALE: 1:2

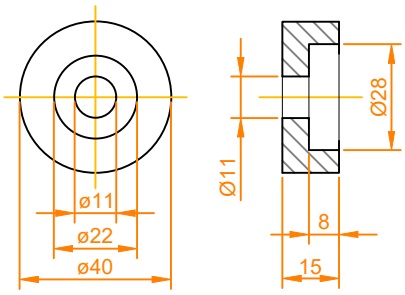

PIN FLANGE

SCALE: 1:2

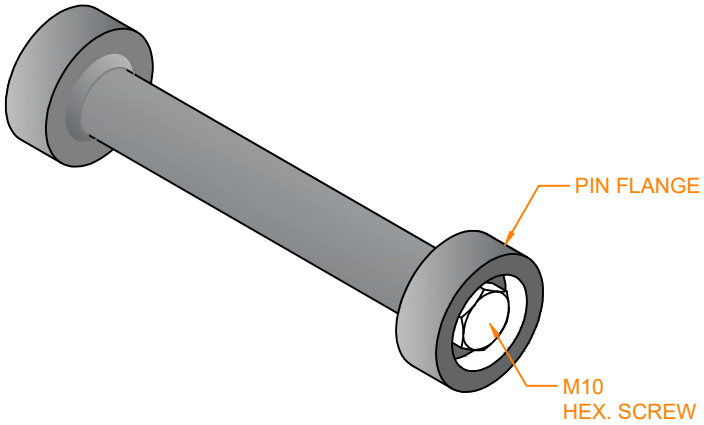

PERSPECTIVE

SCALE: 1:2

FEED DESIGN

GENERAL NOTES

REV.	DESCRIPTION	DATE	EXEC.	CHECK	APPROV.
0	INITIAL ISSUE	21/07/2022	RTVH	CX4H	U4B8

THE DATA, OR PART THEREOF ARE PETROBRAS PROPERTY AND THUS MUST NOT BE USED IN ANY WAY WITHOUT PERMISSION

PETROLEO BRASILEIRO S.A. PETROBRAS

SUB

MATERIAL	WEIGHT	RUGOSITY (C.L.A)
ASTM A-36		

LINEAR DIMENSIONS NOT INDICATED - BOILERMAKING

DIMENSIONS (MM)	DE 2 A ≤30	>30 A ≤120	>120 A ≤400	>400 A ≤1000	>1000 A ≤2000	>2000 A ≤4000	>4000 A ≤8000	>8000 A ≤12000
TOLERANCES	±1	±3	±4	±6	±8	±11	±14	±18

SURFACE COATING **TSA COATING**

TREATMENT

LINEAR DIMENSIONS NOT INDICATED - MACHINING

DIMENSIONS (MM)	DE 0,5 A ≤3	>3 A ≤6	>6 A ≤30	>30 A ≤120	>120 A ≤400	>400 A ≤1000	>1000 A ≤2000	>2000 A ≤4000
LENGHT	±0,2	±0,3	±0,5	±0,8	±1,2	±2,0	±3,0	±4,0
DIAMETER	±0,1	±0,1	±0,2	±0,3	±0,5	±0,8	±1,2	±2,0

CLIENT OR USER **E & P**

JOB OR PROJECT **FPSO UNIT**

AREA OR UNIT **PRODUCTION**

TITLE LOCKING WEDGE PIN

DESIGN	TDUT	DRAWN	RTVH	CHECK	BERK
APPROV.	BF7F	SIZE	A4	CC	
DATE	21/07/2022	SCALE	INDIC.	SHEET	1 of 1

No. I-DE-3010.00-1300-270-P56-016

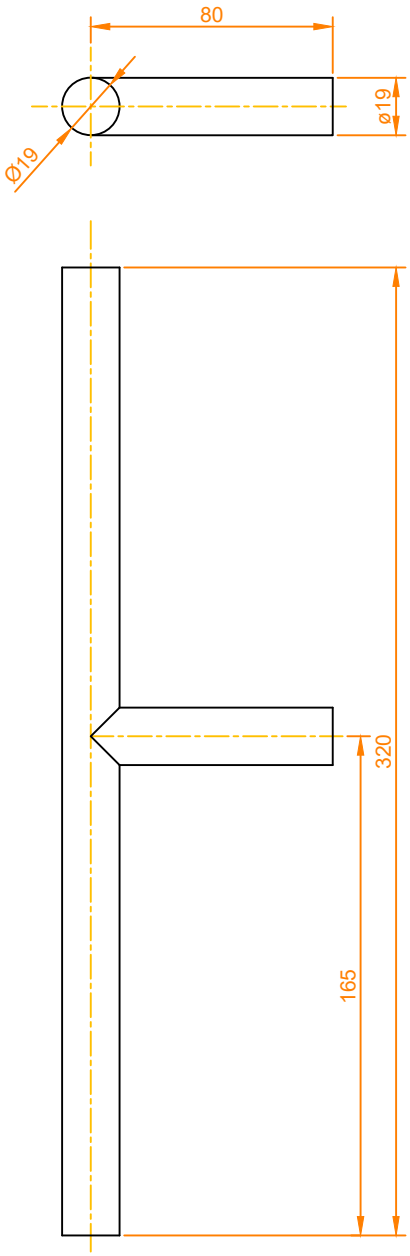

SCALE: 1:2,5

FEED DESIGN

REV.	DESCRIPTION	DATE	EXEC.	CHECK	APPROV.
A	REVISED WHERE INDICATED	20/03/2025	CX4H	U4B8	NTHF
0	INITIAL ISSUE	21/07/2022	RTVH	CX4H	U4B8

GENERAL NOTES

THE DATA, OR PART THEREOF ARE PETROBRAS PROPERTY AND THUS MUST NOT BE USED IN ANY WAY WITHOUT PERMISSION

PETROLEO BRASILEIRO S.A. PETROBRAS

SUB

MATERIAL TBD | WEIGHT | RUGOSITY (C.L.A)

LINEAR DIMENSIONS NOT INDICATED - BOILERMAKING

DIMENSIONS (MM)	DE 2 A ≤30	>30 A ≤120	>120 A ≤400	>400 A ≤1000	>1000 A ≤2000	>2000 A ≤4000	>4000 A ≤8000	>8000 A ≤12000
TOLERANCES	±1	±3	±4	±6	±8	±11	±14	±18

SURFACE COATING

TREATMENT

LINEAR DIMENSIONS NOT INDICATED - MACHINING

DIMENSIONS (MM)	DE 0,5 A ≤3	>3 A ≤6	>6 A ≤30	>30 A ≤120	>120 A ≤400	>400 A ≤1000	>1000 A ≤2000	>2000 A ≤4000
LENGHT	±0,2	±0,3	±0,5	±0,8	±1,2	±2,0	±3,0	±4,0
DIAMETER	±0,1	±0,1	±0,2	±0,3	±0,5	±0,8	±1,2	±2,0

CLIENT OR USER: **E & P**

JOB OR PROJECT: **FPSO UNIT**

AREA OR UNIT: **PRODUCTION**

TITLE: BRACER PIN

DESIGN	TDUT	DRAWN	RTVH	CHECK	BERK
APPROV.	BF7F	SIZE	A4	CC	
DATE	21/07/2022	SCALE	INDIC.	SHEET	1 of 1

No. I-DE-3010.00-1300-270-P56-017

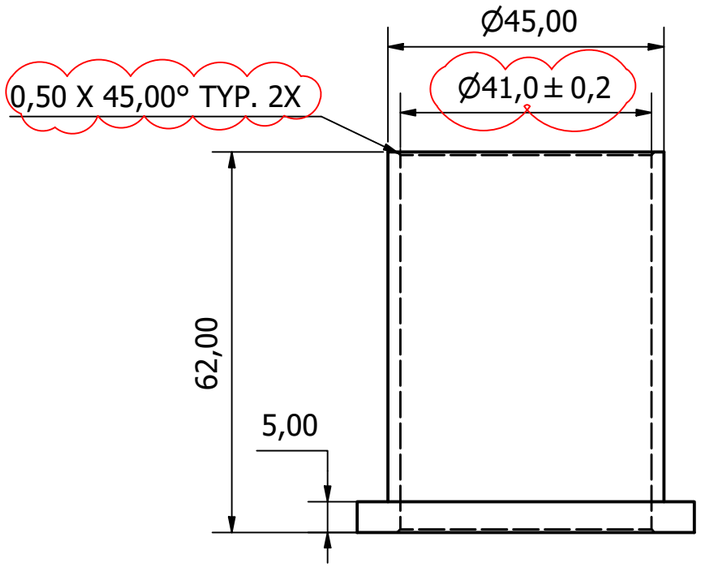

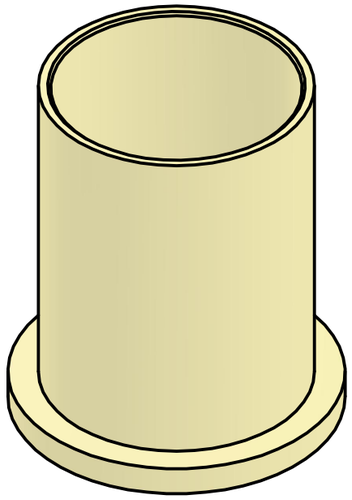

ISOMETRIC VIEW

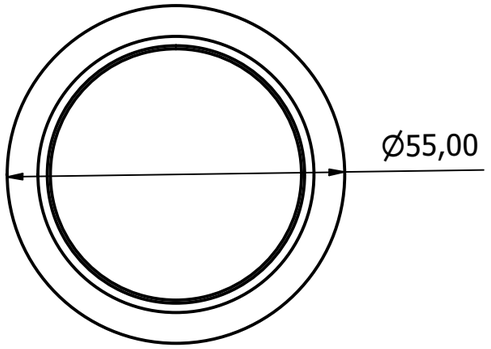

GENERAL NOTES

MATERIAL: THE SELECTED MATERIAL SHALL HAVE FOLLOWING PROPERTIES:

PROPERTIES:

- WATER ABSORPTION (SATURATION) LESS THAN 0.5%;
- RESISTANCE TO ULTRAVIOLET RAYS;
- COEFFICIENT OF FRICTION (STATIC AND DYNAMIC) IN GROUND/POLISHED STEEL LESS THAN 0.3 (EVEN AFTER WATER SATURATION);
- ELECTRICAL INSULATOR;

REV.	DESCRIPTION	DATE	EXEC.	CHECK	APROV.
B	DIMENSION AND MATERIAL REVISION	20/03/25	EVJN	CX4H	NTHF
A	LENGHT DIMENSION	18/09/23	RTVH	CX4H	BF6I
0	INITIAL ISSUE	21/07/22	RTVH	CX4H	U4B8

ACCORDING TO DI-1PBR-00337, INFORMATION IN THIS DOCUMENT IS PETROBRAS PROPERTY BEING PROHIBITED ITS USE OUTSIDE OF THEIR PURPOSE.
FORM OWNED TO PETROBRAS N-381 REV. M.

PETROBRAS

SUB

CLIENT E & P

JOB FPSO UNIT

AREA PRODUCTION

TITLE SHAFT BUSHING

AUTODESK INVENTOR | TECHNICAL DRAWING

FILE: Shaft Bushing.ipt | SCALE 1 : 1 | SHEET 1 of 1

INTERNAL

N° I-DE-3010.00-1300-270-P56-018

MATERIAL SEE GENERAL NOTES

RUGOSITY (C.L.A) 1,6

SURFACE COATING

TREATMENT

LINEAR DIMENSIONS NOT INDICATED – BOILERMAKING

DIMENSIONS (mm)	DE 2 a ≤30	>30 a ≤120	>120 a ≤400	>400 a ≤1000	>1000 a ≤2000	>2000 a ≤4000	>4000 a ≤8000	>8000 a ≤12000
TOLERANCES	± 1	± 3	± 4	± 6	± 8	± 11	± 14	± 18

LINEAR DIMENSIONS NOT INDICATED – MACHINING

DIMENSIONS (mm)	DE 0,5 a ≤3	>3 a ≤6	>6 a ≤30	>30 a ≤120	>120 a ≤400	>400 a ≤1000	>1000 a ≤2000	>2000 a ≤4000
LENGHT	± 0,2	± 0,3	± 0,5	± 0,8	± 1,2	± 2,0	± 3,0	± 4,0
DIAMETER	± 0,1	± 0,1	± 0,2	± 0,3	± 0,5	± 0,8	± 1,2	± 2,0

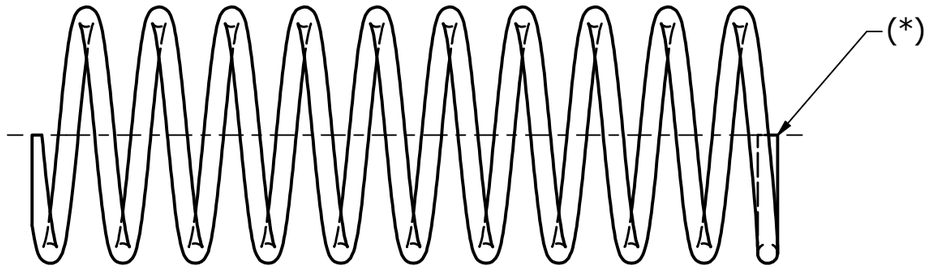

COMPRESSION SPRING DESIGN - SEE NOTE 1					
MATERIAL		CuBe2 (NOTE 2)			
SPRINGS END TYPE		SQUARE AND GROUND ENDS			
COILING DIRECTION		LEFT HAND			
SPRING SPECIFICATIONS					
ACTIVE COILS		N	9		
TOTAL COILS		Nt	11		
WIRE DIAMETER		d	6,6	mm	
OUTSIDE DIAMETER		De	83,5	mm	
FREE LENTGH		L0	390	mm	
LENTGH			FORCE		
L1	240	mm	F1	398	N
L2	95	mm	F2	783	N

GENERAL NOTES

1 - SPRING DESIGN ACCORDING BS EN 13906-1:2013

2- ACC. TO EN12166 - HARDNESS LESS THAN 42HRC

REV.	DESCRIPTION	DATE	EXEC.	CHECK	APROV.
B	TABLE REVISION	10/12/2024	EVJN	CX4H	NTHF
A	FREE AND SOLID LENGHTS / TOTAL COILS	18/09/2023	RTVH	CX4H	BF6I
0	INITIAL ISSUE	21/07/2022	RTVH	CX4H	U4B8

ACCORDING TO DI-1PBR-00337, INFORMATION IN THIS DOCUMENT IS PETROBRAS PROPERTY BEING PROHIBITED ITS USE OUTSIDE OF THEIR PURPOSE.
FORM OWNED TO PETROBRAS N-381 REV. M.

PETROBRAS

SUB

CLIENT E & P

JOB FPSO UNIT

AREA PRODUCTION

TITLE CONE SPRING

AUTODESK INVENTOR® | TECHNICAL DRAWING

FILE: Spring.ipt | SCALE 1 : 2 | SHEET 1 of 1

INTERNAL

N° I-DE-3010.00-1300-270-P56-019

MATERIAL CuBe2 | RUGOSITY (C.L.A) 1,6 | SURFACE COATING / TREATMENT

LINEAR DIMENSIONS NOT INDICATED – BOILERMAKING

DIMENSIONS (mm)	DE 2 a ≤30	>30 a ≤120	>120 a ≤400	>400 a ≤1000	>1000 a ≤2000	>2000 a ≤4000	>4000 a ≤8000	>8000 a ≤12000
TOLERANCES	±1	±3	±4	±6	±8	±11	±14	±18

LINEAR DIMENSIONS NOT INDICATED – MACHINING

DIMENSIONS (mm)	DE 0,5 a ≤3	>3 a ≤6	>6 a ≤30	>30 a ≤120	>120 a ≤400	>400 a ≤1000	>1000 a ≤2000	>2000 a ≤4000
LENGHT	±0,2	±0,3	±0,5	±0,8	±1,2	±2,0	±3,0	±4,0
DIAMETER	±0,1	±0,1	±0,2	±0,3	±0,5	±0,8	±1,2	±2,0

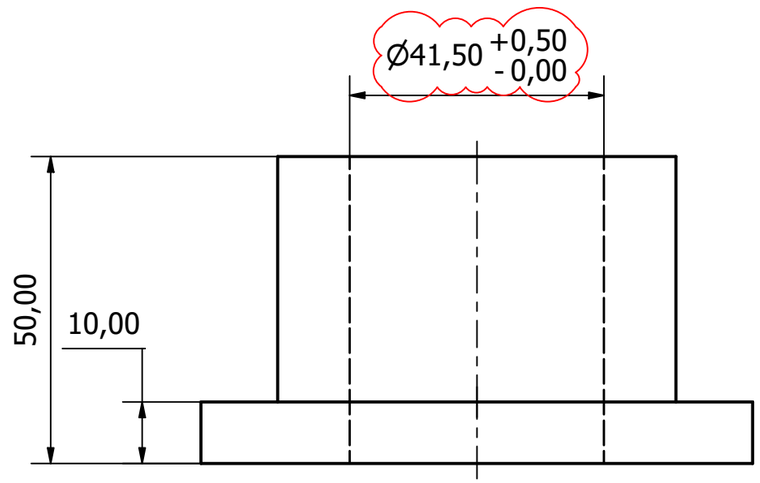

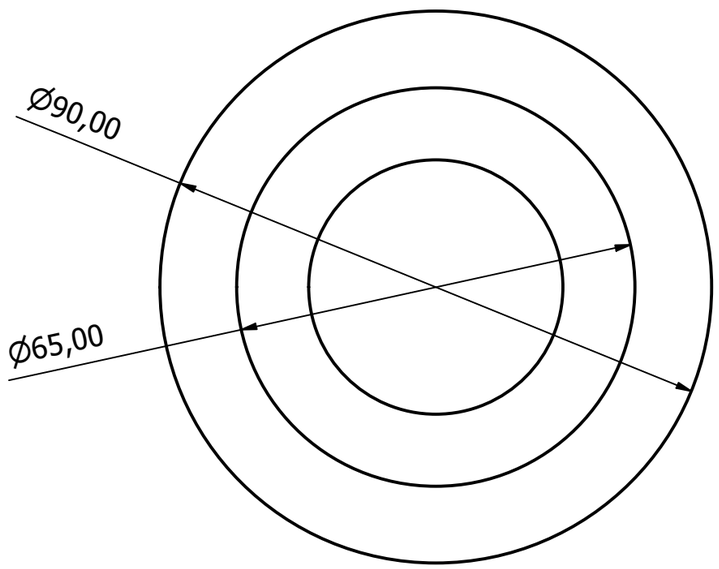

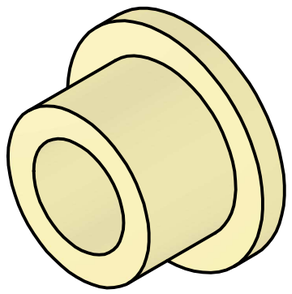

ISOMETRIC VIEW
SCALE 1:2

GENERAL NOTES

MATERIAL: THE SELECTED MATERIAL SHALL HAVE FOLLOWING PROPERTIES:

PROPERTIES:

- WATER ABSORPTION (SATURATION) LESS THAN 0.5%;
- RESISTANCE TO ULTRAVIOLET RAYS;
- COEFFICIENT OF FRICTION (STATIC AND DYNAMIC) IN GROUND/POLISHED STEEL LESS THAN 0.3 (EVEN AFTER WATER SATURATION);
- ELECTRICAL INSULATOR;

REV.	DESCRIPTION	DATE	EXEC.	CHECK	APROV.
A	MATERIAL AND DIMENSION REVISION	20/03/25	EVJN	CX4H	NTHF
0	INITIAL ISSUE	21/07/22	RTVH	CX4H	U4B8

ACCORDING TO DI-1PBR-00337, INFORMATION IN THIS DOCUMENT IS PETROBRAS PROPERTY BEING PROHIBITED ITS USE OUTSIDE OF THEIR PURPOSE.
FORM OWNED TO PETROBRAS N-381 REV. M.

PETROBRAS

SUB

CLIENT E & P

JOB FPSO UNIT

AREA PRODUCTION

TITLE SPRING BUSHING

AUTODESK INVENTOR | TECHNICAL DRAWING

FILE: Spring Bushing.ipt | SCALE 1 : 1 | SHEET 1 of 1

INTERNAL

N° I -DE-3010.00-1300-270-P56-020

MATERIAL SEE GENERAL NOTES | RUGOSITY (C.L.A) 1,6 | SURFACE COATING | TREATMENT

LINEAR DIMENSIONS NOT INDICATED – BOILERMAKING

DIMENSIONS (mm)	DE 2 a <30	>30 a <120	>120 a <400	>400 a <1000	>1000 a <2000	>2000 a <4000	>4000 a <8000	>8000 a <12000
TOLERANCES	± 1	± 3	± 4	± 6	± 8	± 11	± 14	± 18

LINEAR DIMENSIONS NOT INDICATED – MACHINING

DIMENSIONS (mm)	DE 0,5 a <3	>3 a <6	>6 a <30	>30 a <120	>120 a <400	>400 a <1000	>1000 a <2000	>2000 a <4000
LENGHT	± 0,2	± 0,3	± 0,5	± 0,8	± 1,2	± 2,0	± 3,0	± 4,0
DIAMETER	± 0,1	± 0,1	± 0,2	± 0,3	± 0,5	± 0,8	± 1,2	± 2,0

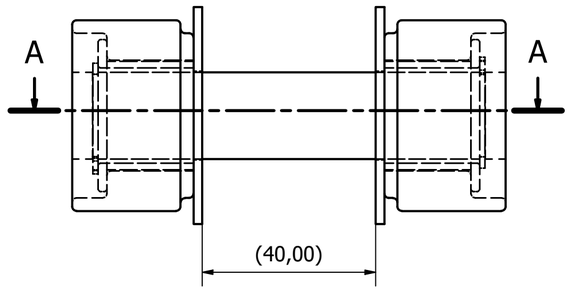

A-A (1 : 1)

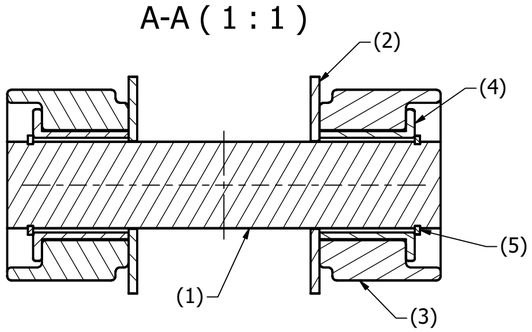

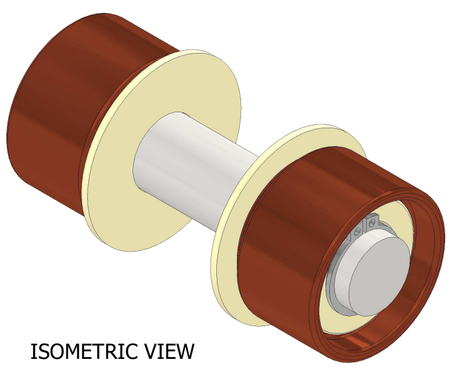

ISOMETRIC VIEW

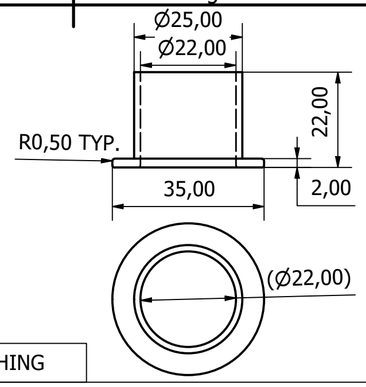

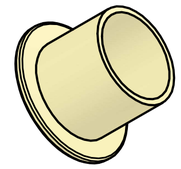

ISOMETRIC VIEW

WHEEL BUSHING

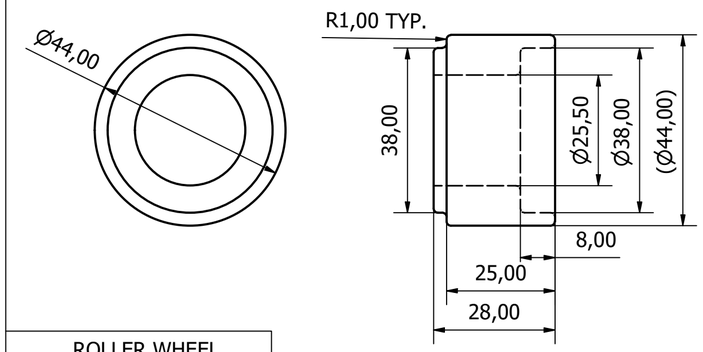

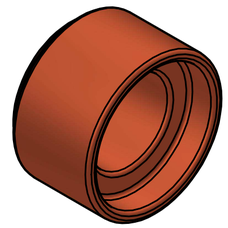

ISOMETRIC VIEW

ROLLER WHEEL

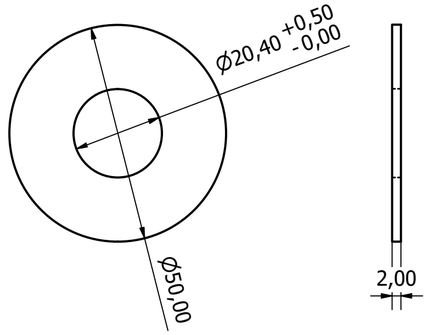

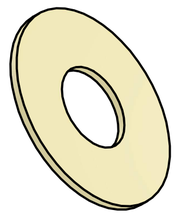

ISOMETRIC VIEW

WASHER

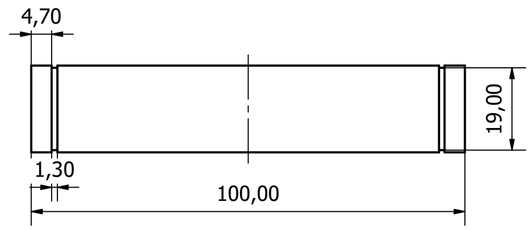

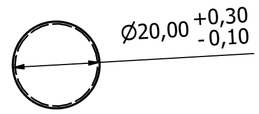

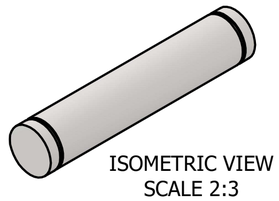

ISOMETRIC VIEW
SCALE 2:3

ROLLER SHAFT

MATERIAL	SEE GENERAL NOTES	RUGOSITY (C.L.A) 1,6	SURFACE COATING TREATMENT	TSA COATING (ONLY ON AISI 4140)

LINEAR DIMENSIONS NOT INDICATED — BOILERMAKING

DIMENSIONS (mm)	DE 2 a <30	>30 a <120	>120 a <400	>400 a <1000	>1000 a <2000	>2000 a <4000	>4000 a <8000	>8000 a <12000
TOLERANCES	± 1	± 3	± 4	± 6	± 8	± 11	± 14	± 18

LINEAR DIMENSIONS NOT INDICATED — MACHINING

DIMENSIONS (mm)	DE 0,5 a <3	>3 a <6	>6 a <30	>30 a <120	>120 a <400	>400 a <1000	>1000 a <2000	>2000 a <4000
LENGHT	± 0,2	± 0,3	± 0,5	± 0,8	± 1,2	± 2,0	± 3,0	± 4,0
DIAMETER	± 0,1	± 0,1	± 0,2	± 0,3	± 0,5	± 0,8	± 1,2	± 2,0

1 : 1

GENERAL NOTES

1- MATERIAL:

(1) SHAFT - AISI 4140 QUENCHED AND TEMPERED
- MAXIMUM HARDNESS 32 HRC
- MINIMUM HARDNESS 26 HRC
- MINIMUM YIELD STRENGTH: 725 MPA
- MINIMUM ULTIMATE TENSILE STRENGTH: 860 MPA

(2) WASHER - SEE NOTE 2
(3) WHEEL - UNS-C95500 HT
(4) WHEEL BUSHING -SEE NOTE 2
(5) ELASTIC RING (DIN 471 OR SIMILAR)

2- THE SELECTED MATERIAL SHALL HAVE FOLLOWING PROPERTIES:

PROPERTIES:

- WATER ABSORPTION (SATURATION) LESS THAN 0.5%;
- RESISTANCE TO ULTRAVIOLET RAYS;
- COEFFICIENT OF FRICTION (STATIC AND DYNAMIC) IN GROUND/POLISHED STEEL LESS THAN 0.3 (EVEN AFTER WATER SATURATION);
- ELECTRICAL INSULATOR;

REV.	DESCRIPTION	DATE	EXEC.	CHECK	APROV.
B	GENERAL REVISION	10/12/2024	SUB/ES/EDA/EAI	CX4H	NTHF
A	GENERAL REVISION	01/12/2023	RTVH	CX4H	BF6I
0	INITIAL ISSUE	21/07/2022	RTVH	CX4H	U4B8

ACCORDING TO DI-1PBR-00337, INFORMATION IN THIS DOCUMENT IS PETROBRAS PROPERTY BEING PROHIBITED ITS USE OUTSIDE OF THEIR PURPOSE.
FORM OWNED TO PETROBRAS N-381 REV. M.

PETROBRAS | SUB

CLIENT E & P

JOB FPSO UNIT

AREA PRODUCTION

TITLE SHAFT ROLLER

TECHNICAL DRAWING

SCALE | SHEET of

INTERNAL

N° I-DE-3010.00-1300-270-P56-021

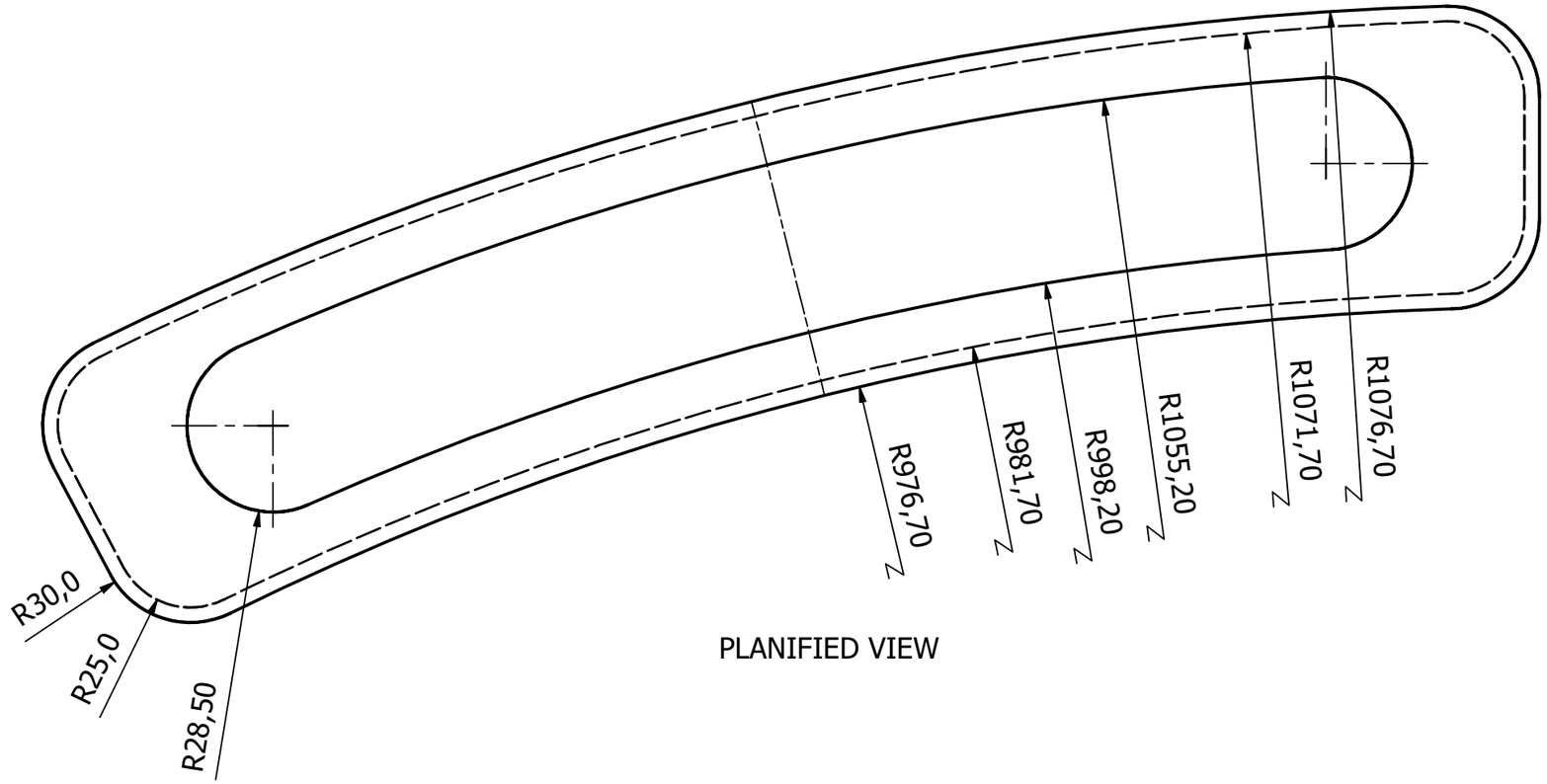

PLANIFIED VIEW

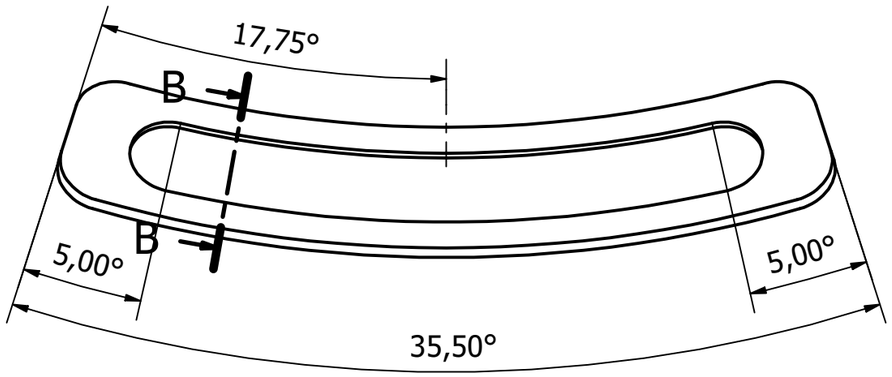

POST BEND

B-B (1 : 4)

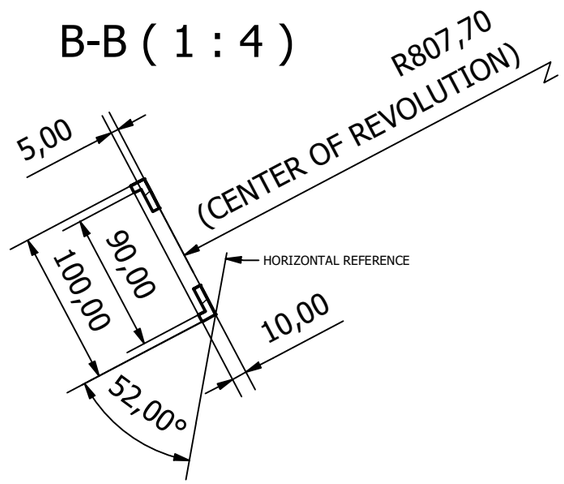

GENERAL NOTES

MATERIAL: THE SELECTED MATERIAL SHALL HAVE FOLLOWING PROPERTIES:

PROPERTIES:

- WATER ABSORPTION (SATURATION) LESS THAN 0.5%;
- RESISTANCE TO ULTRAVIOLET RAYS;
- COEFFICIENT OF FRICTION (STATIC AND DYNAMIC) IN GROUND/POLISHED STEEL LESS THAN 0.3 (EVEN AFTER WATER SATURATION);
- ELECTRICAL INSULATOR;

REV.	DESCRIPTION	DATE	EXEC.	CHECK	APROV.
B	MATERIAL REVISION	10/12/2024	EVJN	CX4H	NTHF
A	CENTER OF REVOLUTION RADIUS REVISED	18/09/2023	RTVH	CX4H	BF6I
0	INITIAL ISSUE	21/07/2022	RTVH	CX4H	U4B8

ACCORDING TO DI-1PBR-00337, INFORMATION IN THIS DOCUMENT IS PETROBRAS PROPERTY BEING PROHIBITED ITS USE OUTSIDE OF THEIR PURPOSE.
FORM OWNED TO PETROBRAS N-381 REV. M.

PETROBRAS

SUB

CLIENT E & P

JOB FPSO UNIT

AREA PRODUCTION

TITLE CAM BUSHING

TECHNICAL DRAWING

SCALE 1 : 2 SHEET of

INTERNAL

N° I -DE-3010.00-1300-270-P56-022

MATERIAL SEE GENERAL NOTES

RUGOSITY (C.L.A) 1,6

SURFACE COATING

TREATMENT

LINEAR DIMENSIONS NOT INDICATED – BOILERMAKING

DIMENSIONS (mm)	DE 2 a <30	>30 a <120	>120 a <400	>400 a <1000	>1000 a <2000	>2000 a <4000	>4000 a <8000	>8000 a <12000
TOLERANCES	± 1	± 3	± 4	± 6	± 8	± 11	± 14	± 18

LINEAR DIMENSIONS NOT INDICATED – MACHINING

DIMENSIONS (mm)	DE 0,5 a <3	>3 a <6	>6 a <30	>30 a <120	>120 a <400	>400 a <1000	>1000 a <2000	>2000 a <4000
LENGHT	± 0,2	± 0,3	± 0,5	± 0,8	± 1,2	± 2,0	± 3,0	± 4,0
DIAMETER	± 0,1	± 0,1	± 0,2	± 0,3	± 0,5	± 0,8	± 1,2	± 2,0

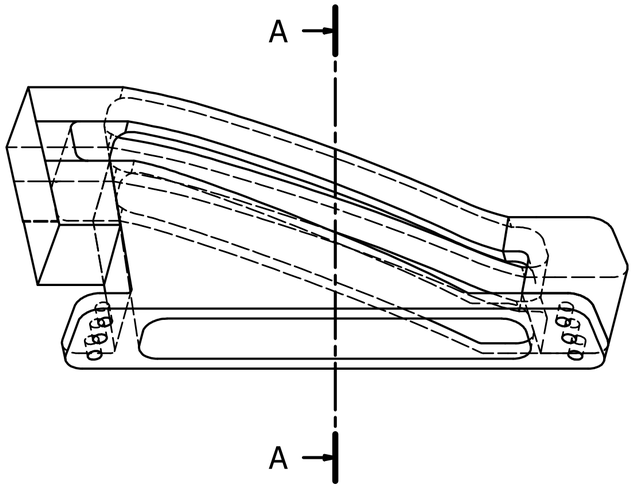

A-A (1 : 4)

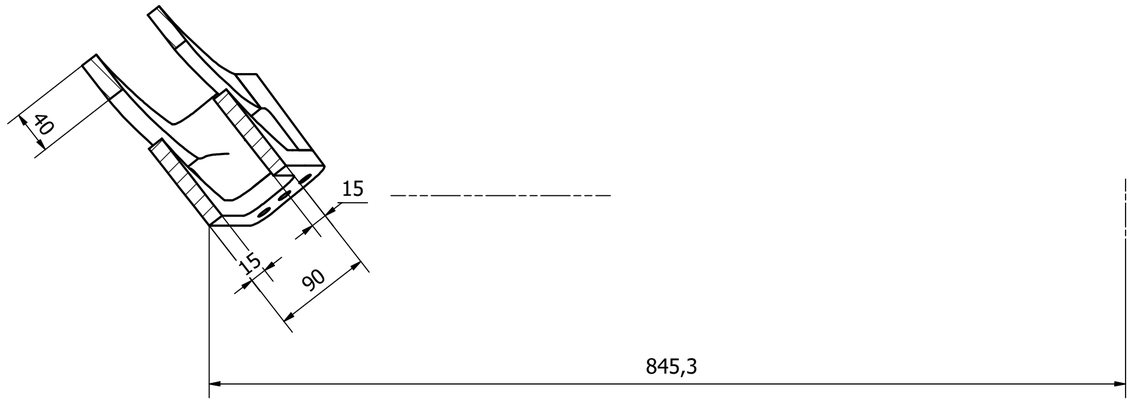

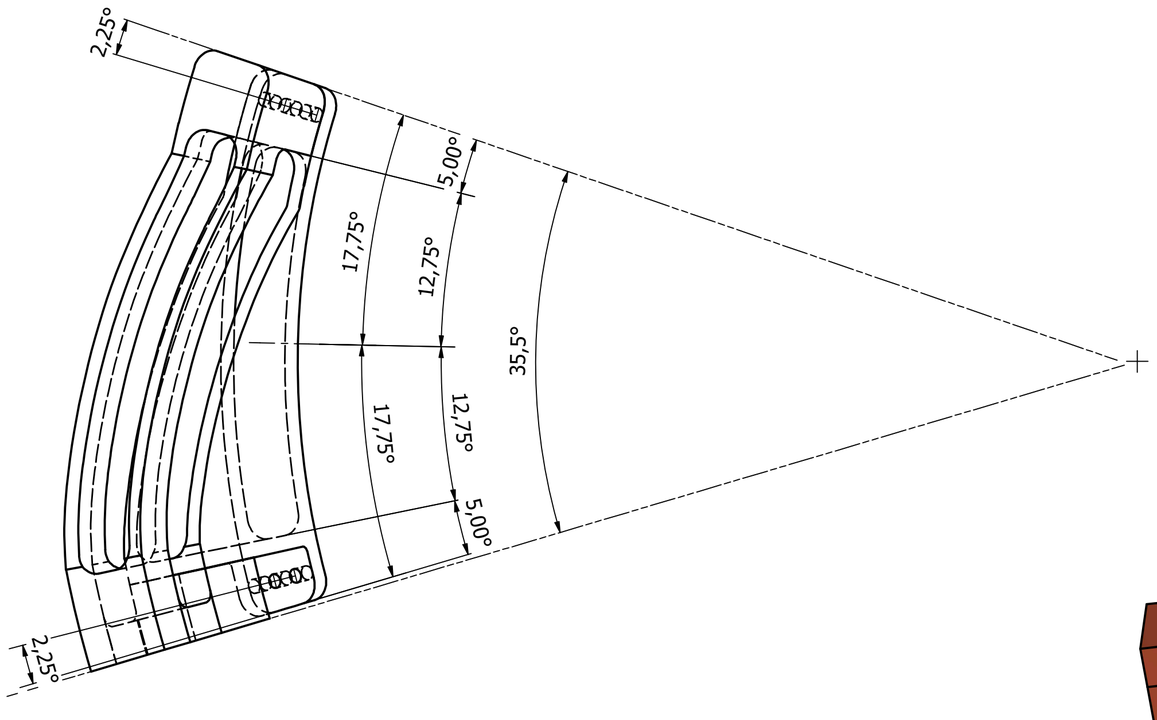

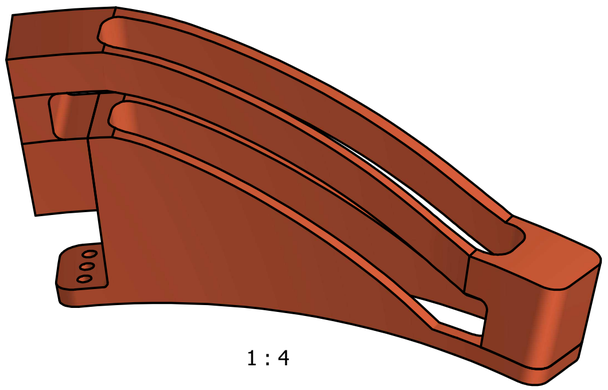

1 : 4

MATERIAL: UNS C95500 HT

FURTHER DETAILS AND DIMENSIONS WILL BE PROVIDED IN NOTICE TO PROCEEED.

REV.	DESCRIPTION	DATE	EXEC.	CHECK	APROV.
0	INITIAL ISSUE	18/3/25	CX4H	U4B8	NTHF

ACCORDING TO DI-1PBR-00337, INFORMATION IN THIS DOCUMENT IS PETROBRAS PROPERTY BEING PROHIBITED ITS USE OUTSIDE OF THEIR PURPOSE.
FORM OWNED TO PETROBRAS N-381 REV. M.

PETROBRAS

SUB

CLIENT

JOB

AREA

TITLE DOUBLE CAM

AUTODESK INVENTOR® | TECHNICAL DRAWING

FILE: DOUBLE CAM.ipt | SCALE | SHEET 1 of 1

INTERNAL

N° I-DE-3010.00-1300-270-PX9-001

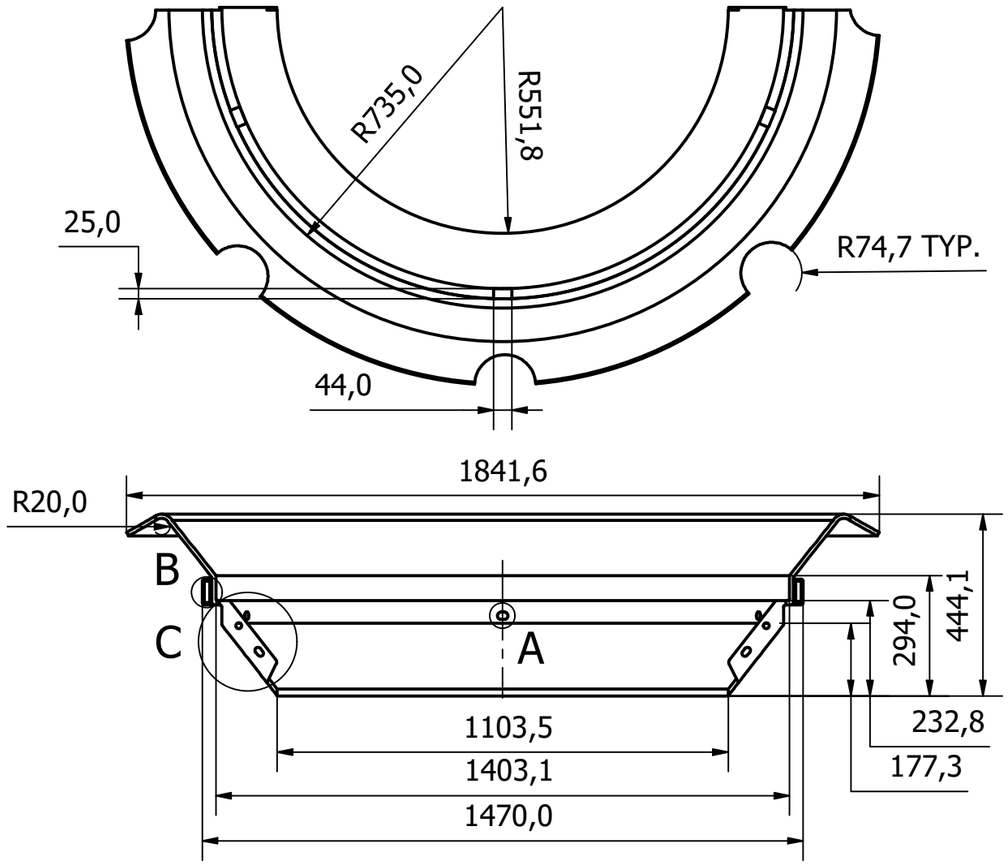

B (1 : 3)

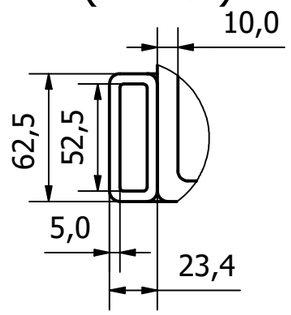

A (1 : 2)

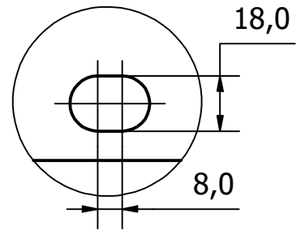

C (1 : 3)

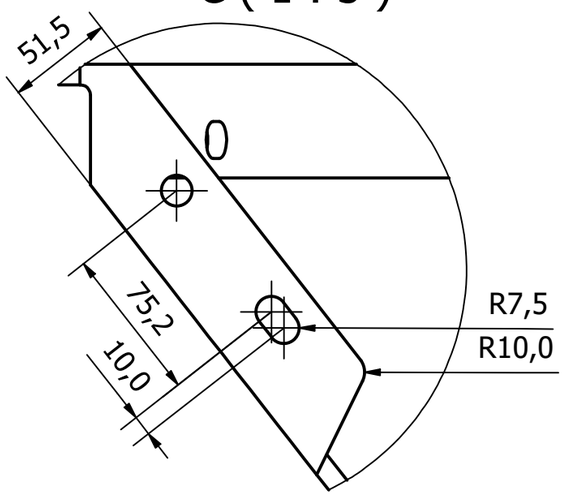

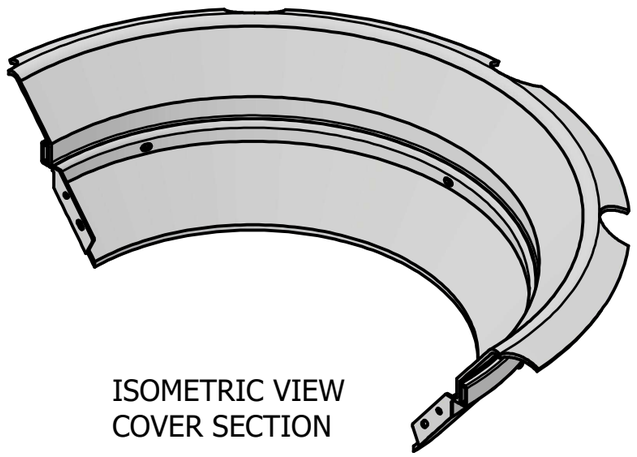

ISOMETRIC VIEW
COVER SECTION

GENERAL NOTES

MAIN REQUIREMENTS:

- THE COVER DESIGN MUST ALLOW IT TO REMAIN INSTALLED EVEN AFTER THE RISER IS INSTALLED ON THE TSUDL, I.E., THE HOA MUST BE ABLE TO SETTLE WITHOUT REQUIRING THE COVER'S REMOVAL.
- THE COVER MUST INCLUDE LIFTING LUGS FOR SUSPENSION USING HOISTS.
- THE COVER MUST HAVE A FUNNEL SHAPE TO FACILITATE THE ENTRY OF PULL-IN CABLE ACCESSORIES.
- THE COVER MUST BE DIVIDED INTO SECTIONS TO ALLOW REMOVAL IF NECESSARY.
- THE DESIGN OF THE COVER FASTENERS MUST TAKE INTO ACCOUNT THE LOADS RESULTING FROM THE IMPACT OF THE PULL-IN HOOK AND WAVE EFFECTS (AS PER I-ET-3010.1Y-1351-140-P4X-001).

REV.	DESCRIPTION	DATE	EXEC.	CHECK	APROV.
0	INITIAL ISSUE	30/01/2025	EVJN	CX4H	NTHF

ACCORDING TO DI-1PBR-00337, INFORMATION IN THIS DOCUMENT IS PETROBRAS PROPERTY BEING PROHIBITED ITS USE OUTSIDE OF THEIR PURPOSE.
FORM OWNED TO PETROBRAS N-381 REV. M.

PETROBRAS

SUB

CLIENT E & P

JOB FPSO UNIT

AREA PRODUCTION

TITLE PROTECTION CAP FOR TOP CONE

TECHNICAL DRAWING

SCALE 1 : 15 SHEET of

INTERNAL

N° I-DE-3010.00-1300-270-P56-050

MATERIAL ASTM A 36 (MIN YS=355Mpa)

RUGOSITY (C.L.A) 1,6

SURFACE COATING ANTIFOULING PAINTING

TREATMENT

LINEAR DIMENSIONS NOT INDICATED – BOILERMAKING

DIMENSIONS (mm)	DE 2 a 30	>30 a 120	>120 a 400	>400 a 1000	>1000 a 2000	>2000 a 4000	>4000 a 8000	>8000 a 12000
TOLERANCES	± 1	± 3	± 4	± 6	± 8	± 11	± 14	± 18

LINEAR DIMENSIONS NOT INDICATED – MACHINING

DIMENSIONS (mm)	DE 0,5 a 3	>3 a 6	>6 a 30	>30 a 120	>120 a 400	>400 a 1000	>1000 a 2000	>2000 a 4000
LENGHT	± 0,2	± 0,3	± 0,5	± 0,8	± 1,2	± 2,0	± 3,0	± 4,0
DIAMETER	± 0,1	± 0,1	± 0,2	± 0,3	± 0,5	± 0,8	± 1,2	± 2,0

GENERAL NOTES

THE PURPOSE OF THIS DRAWING IS TO PROVIDE BASIC DIMENSIONS AND PRE-APPROVED MATERIALS FOR TSUDL TOP CONE MEETING THE REQUIREMENTS SET ON I-ET-3010.00-1519-140-P56-001 - UNIFIED DIVERLESS SUPPORT TUBE MAINLY REGARDING MINIMUM SPRING FORCE CONSIDERING SPRING MATERIAL PROPERTIES.

IT IS NOT THE PURPOSE OF THIS DRAWING TO PROVIDE DETAILED DESIGN THAT IS THE RESPONSIBILITY FOR ACTUATOR SUPPLIER.

PN	DESCRIPTION	QTD	MATERIAL
1	M16 X 60 ISO 4762	12	ASTM A 182 S31266
2	PISTON	1	ASTM A 182 S31266
3	ROD	1	ASTM A 182 S31266
4	CAP	1	ASTM A 182 S31266
5	REAR PIN	1	ASTM A 182 S31266
6	CYLINDER TUBE	1	ASTM A 182 S31266
7	FRONT PIN	1	ASTM A 182 S31266
8	ROD CLEVIS	1	ASTM A 182 S31266
9	SPRING	1	ALLOY UNS N07718 max 35 HRC

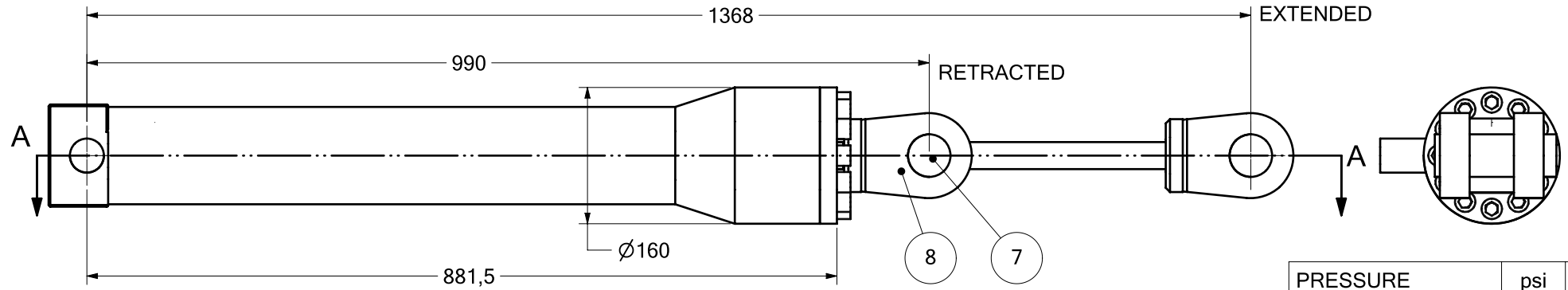

PRESSURE	psi	MPa
TEST PRESSURE	5500	37,9
MAX. PRESSURE (EXTREME COND.)	5000	34,5

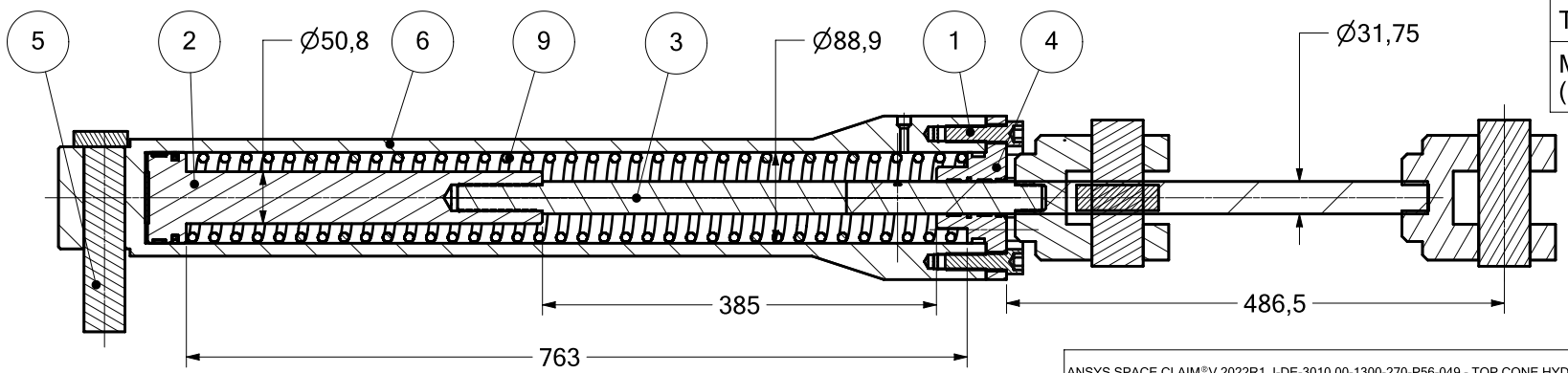

SECTION A-A

SCALE 1:5

FEED DRAWING

NOTE 1: USE MECHANICAL LOCKING SUCH AS ADHESIVE OR PIN ON ROD SCREWS

	REV. 0	REV. A	REV. B	REV. C	REV. D	REV. E	REV. F	REV. G	REV. H	REV. J	REV. K
DATE	24/05/24	12/03/25									
DESIGN	PSUB	EAI									
EXECUTION	Roberto	Roberto									
CHECK	Leonardo	Leonardo									
APPROVAL	Perotto	Loreta									

ANSYS SPACE CLAIM®V 2022R1 I-DE-3010.00-1300-270-P56-049 - TOP CONE HYDRAULIC ACTUADOR - rev A.scdoc

PETROBRAS

SISTEMAS SUBMARINOS

DRAWING Nº: I-DE-3010.00-1300-270-P56-049

CLIENT:

SHEET: 1 of 7

JOB: TSUDL

CC:

AREA:

TITLE: TOP CONE HYDRAULIC CYLINDER

INTERNAL

SUB/ES/PSUB-CDESC

FORM OWNED TO PETROBRAS NI-0381 REV. L

INFORMATION IN THIS DOCUMENT IS PROPERTY OF PETROBRAS, BEING PROHIBITED OUTSIDE OF THEIR PURPOSE

HEXAGON SOCKET HEAD CAP SCREW ISO 4762 M16 X 60

MATERIAL: ASTM 182 S31266

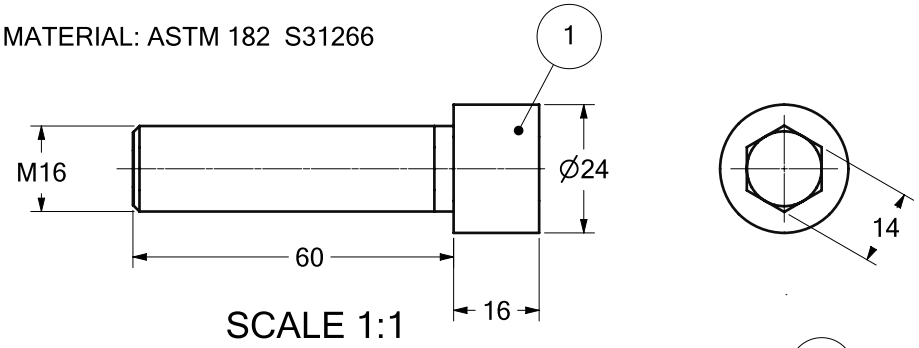

SCALE 1:1

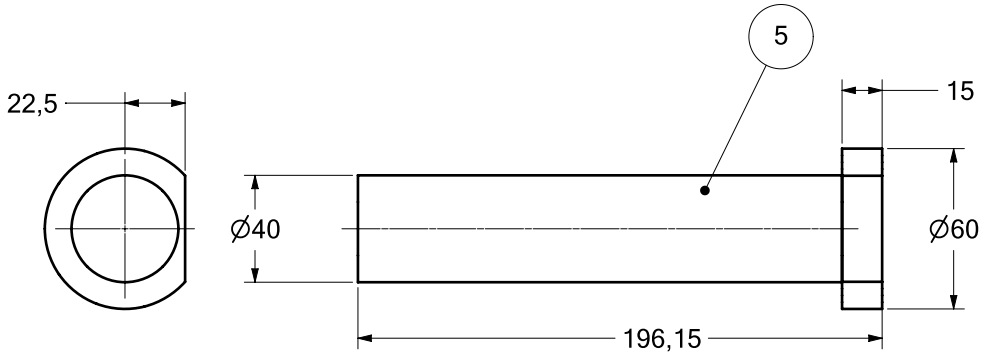

SCALE 1:2

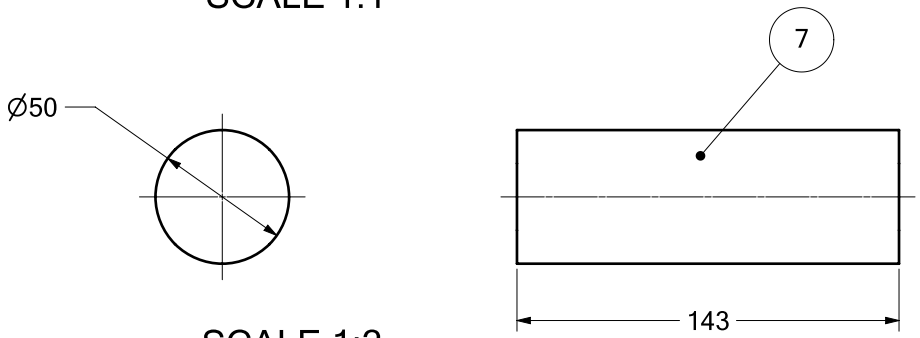

SCALE 1:2

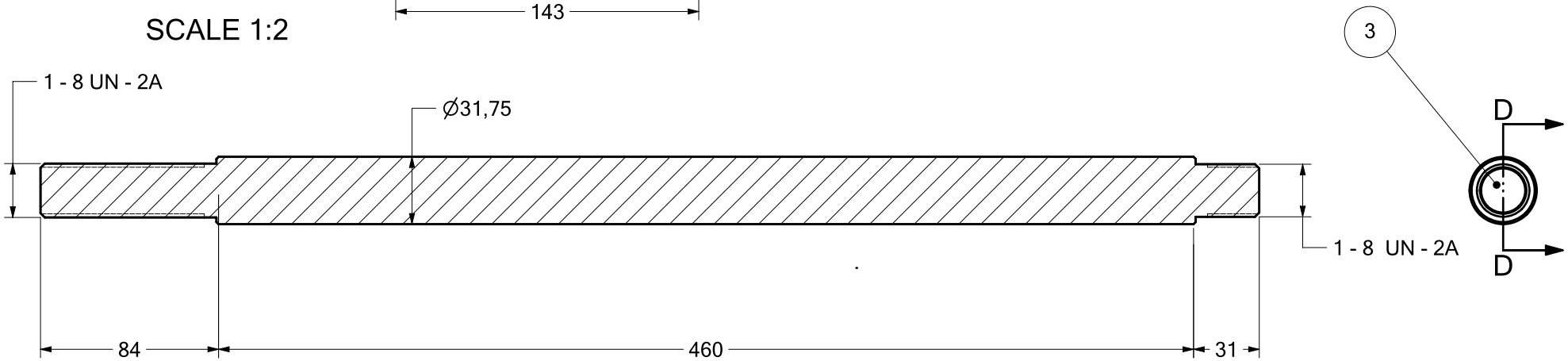

FEED DRAWING

SECTION D-D
SCALE 1:2

	REV. 0	REV. A	REV. B	REV. C	REV. D	REV. E	REV. F	REV. G	REV. H	REV. J	REV. K
DATE	24/05/24	12/03/25									
DESIGN	PSUB	EAI									
EXECUTION	Roberto	Roberto									
CHECK	Leonardo	Leonardo									
APPROVAL	Perotto	Loreta									

ANSYS SPACE CLAIM®V 2022R1 I-DE-3010.00-1300-270-P56-049 - TOP CONE HYDRAULIC ACTUADOR - rev A copia.scdoc

PETROBRAS

SISTEMAS SUBMARINOS

DRAWING Nº: I-DE-3010.00-1300-270-P56-049

CLIENT:

SHEET: 2 of 7

JOB: TSUDL

CC:

AREA:

TITLE: TOP CONE HYDRAULIC CYLINDER

INTERNAL

SUB/ES/PSUB-CDESC

FORM OWNED TO PETROBRAS NI-0381 REV. L

INFORMATION IN THIS DOCUMENT IS PROPERTY OF PETROBRAS, BEING PROHIBITED OUTSIDE OF THEIR PURPOSE

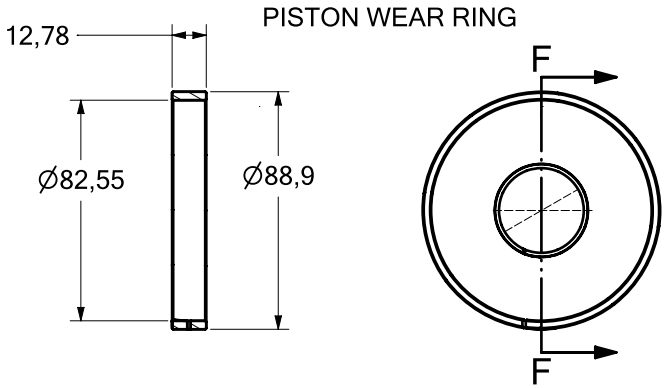

SECTION F-F
SCALE 1:2

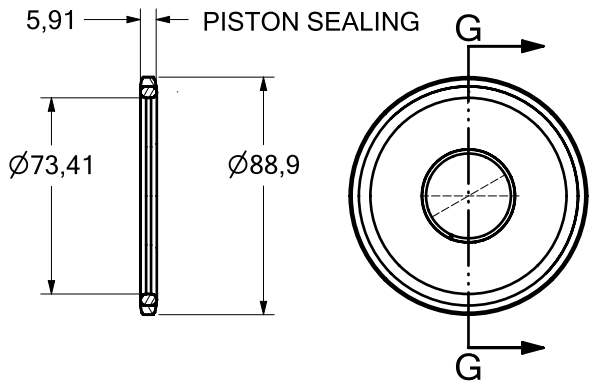

SECTION G-G
SCALE 1:2

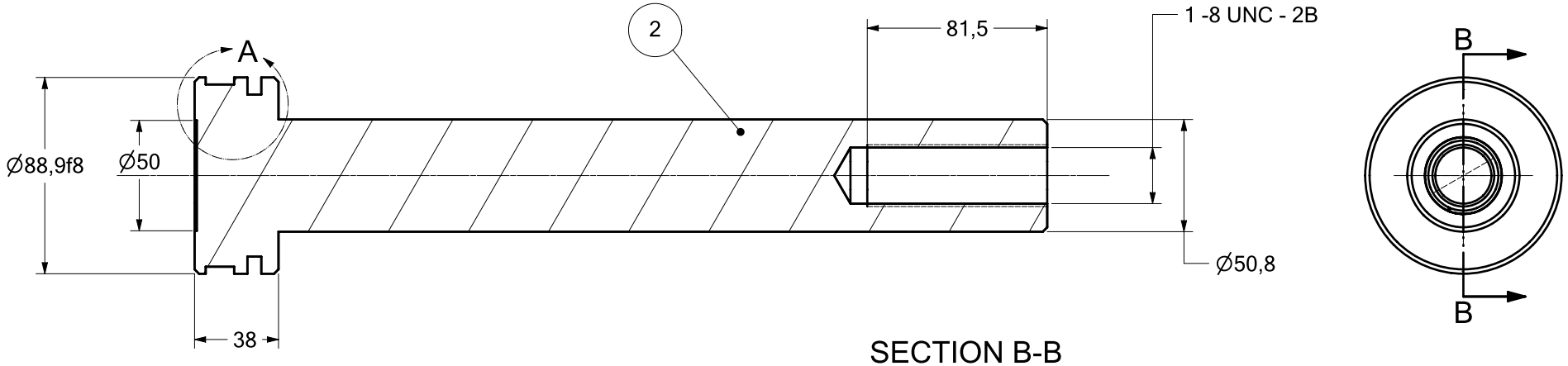

SECTION B-B
SCALE 1:2

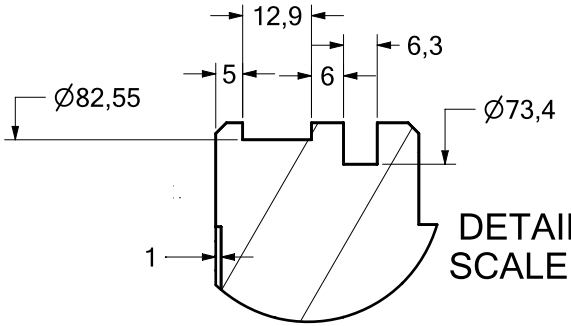

DETAIL A
SCALE 1:1

FEED DRAWING

ANSYS SPACE CLAIM®V 2022R1 I-DE-3010.00-1300-270-P56-049 - TOP CONE HYDRAULIC ACTUADOR - rev A copia.scdoc

	REV. 0	REV. A	REV. B	REV. C	REV. D	REV. E	REV. F	REV. G	REV. H	REV. J	REV. K
DATE	24/05/24	12/03/25									
DESIGN	PSUB	EAI									
EXECUTION	Roberto	Roberto									
CHECK	Leonardo	Leonardo									
APPROVAL	Perotto	Loreta									

BR PETROBRAS

DRAWING Nº: I-DE-3010.00-1300-270-P56-049

CLIENT:

SHEET: 3 of 7

JOB: TSUDL

CC:

AREA:

TITLE: TOP CONE HYDRAULIC CYLINDER

INTERNAL

SUB/ES/PSUB-CDESC

FORM OWNED TO PETROBRAS NI-0381 REV. L

INFORMATION IN THIS DOCUMENT IS PROPERTY OF PETROBRAS, BEING PROHIBITED OUTSIDE OF THEIR PURPOSE

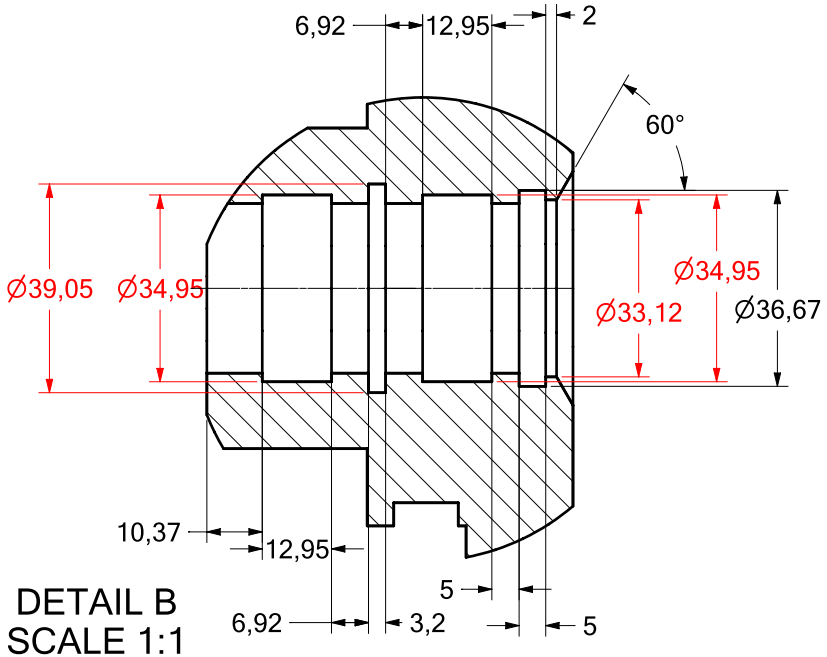

DETAIL B
SCALE 1:1

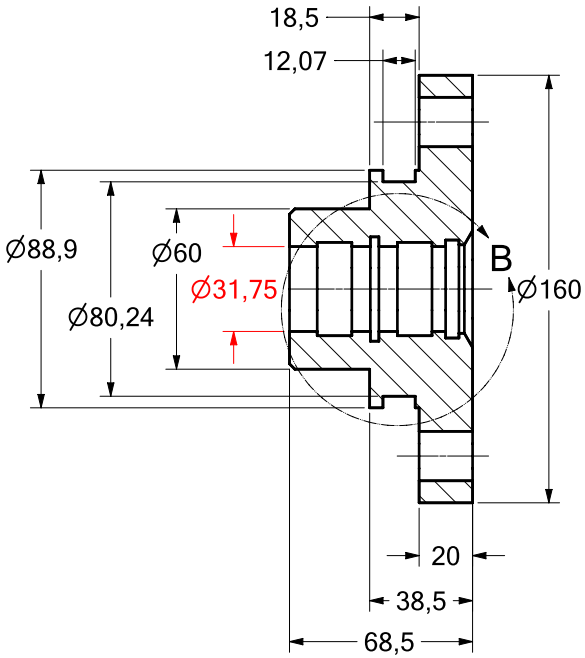

SECTION C-C
SCALE 1:2

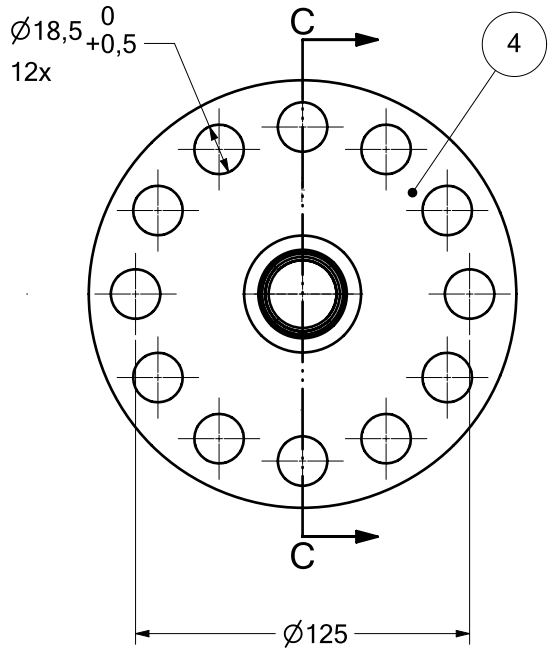

WEAR RINGS
2x

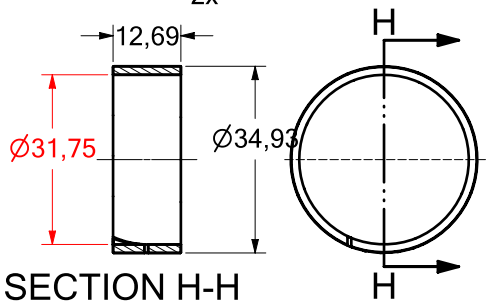

SECTION H-H
SCALE 1:1

ROD SEAL

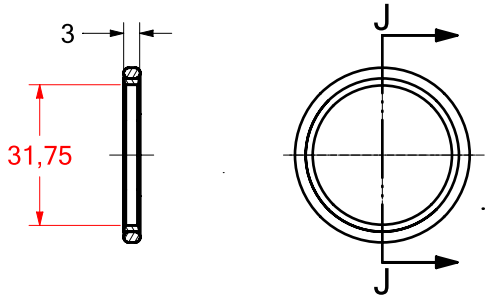

SECTION J-J
SCALE 1:1

SCRAPPER

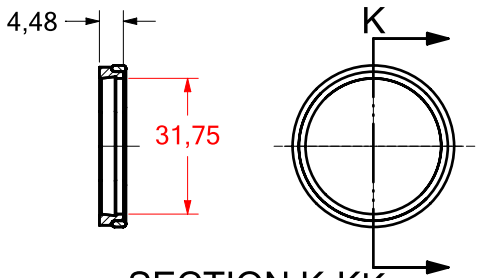

SECTION K-KK
SCALE 1:1

FEED DRAWING

ANSYS SPACE CLAIM®V 2022R1 I-DE-3010.00-1300-270-P56-049 - TOP CONE HYDRAULIC ACTUADOR - rev A copia.scdoc

	REV. 0	REV. A	REV. B	REV. C	REV. D	REV. E	REV. F	REV. G	REV. H	REV. J	REV. K
DATE	24/05/24	12/03/25									
DESIGN	PSUB	EAI									
EXECUTION	Roberto	Roberto									
CHECK	Leonardo	Leonardo									
APPROVAL	Perotto	Loreta									

PETROBRAS

SISTEMAS SUBMARINOS

DRAWING Nº: I-DE-3010.00-1300-270-P56-049

CLIENT:

SHEET: 4 of 7

JOB: TSUDL

CC:

AREA:

TITLE: TOP CONE HYDRAULIC CYLINDER

INTERNAL

SUB/ES/PSUB-CDESC

FORM OWNED TO PETROBRAS NI-0381 REV. L

INFORMATION IN THIS DOCUMENT IS PROPERTY OF PETROBRAS, BEING PROHIBITED OUTSIDE OF THEIR PURPOSE

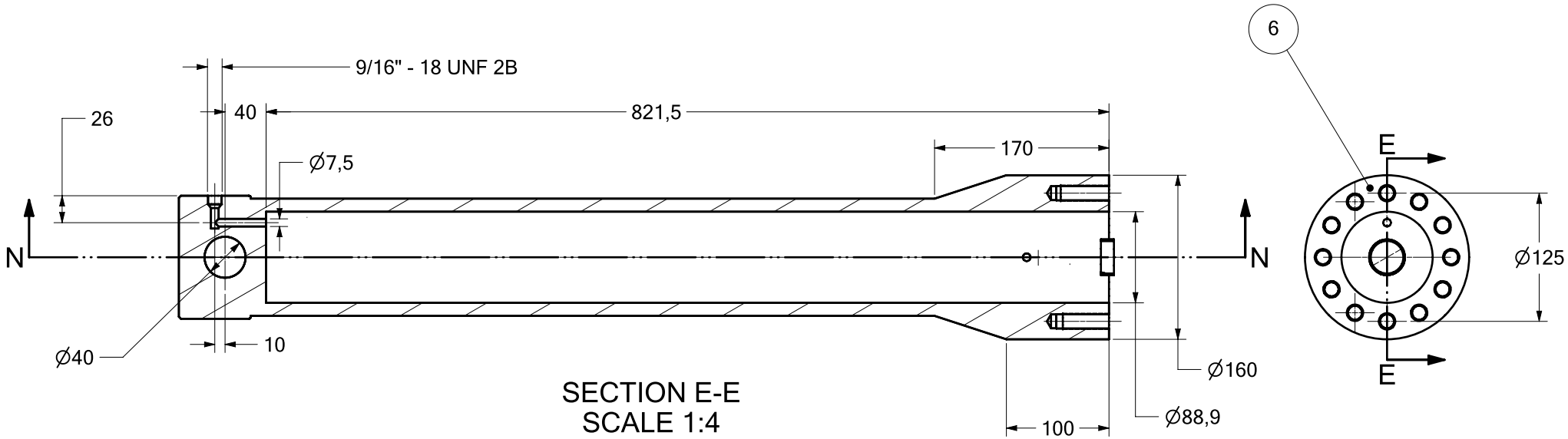

SECTION E-E
SCALE 1:4

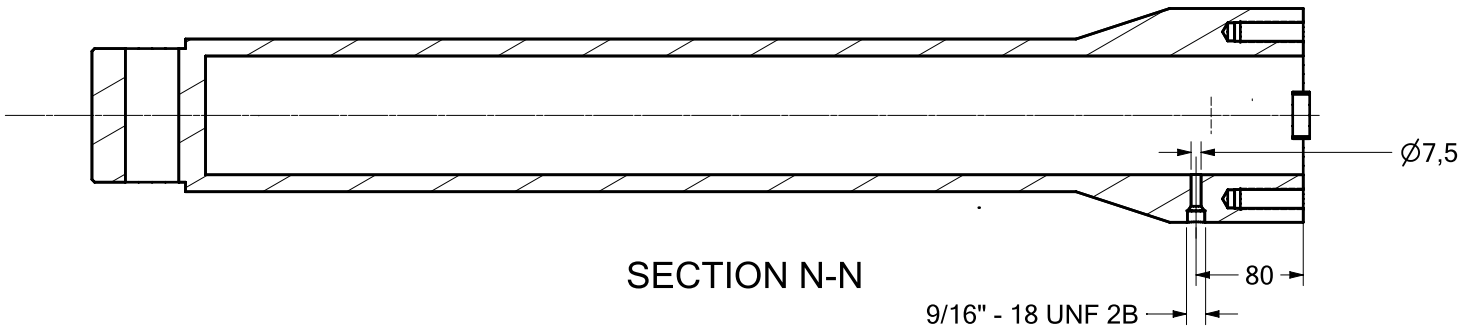

SECTION N-N

FEED DRAWING

ANSYS SPACE CLAIM®V 2022R1 I-DE-3010.00-1300-270-P56-049 - TOP CONE HYDRAULIC ACTUADOR - rev A copia.scdoc

	REV. 0	REV. A	REV. B	REV. C	REV. D	REV. E	REV. F	REV. G	REV. H	REV. J	REV. K
DATE	24/05/24	12/03/25									
DESIGN	PSUB	EAI									
EXECUTION	Roberto	Roberto									
CHECK	Leonardo	Leonardo									
APPROVAL	Perotto	Loreta									

BR PETROBRAS

SISTEMAS SUBMARINOS

DRAWING Nº: I-DE-3010.00-1300-270-P56-049

CLIENT:

SHEET: 5 of 7

JOB: TSUDL

CC:

AREA:

TITLE: TOP CONE HYDRAULIC CYLINDER

INTERNAL

SUB/ES/PSUB-CDESC

FORM OWNED TO PETROBRAS NI-0381 REV. L

INFORMATION IN THIS DOCUMENT IS PROPERTY OF PETROBRAS, BEING PROHIBITED OUTSIDE OF THEIR PURPOSE

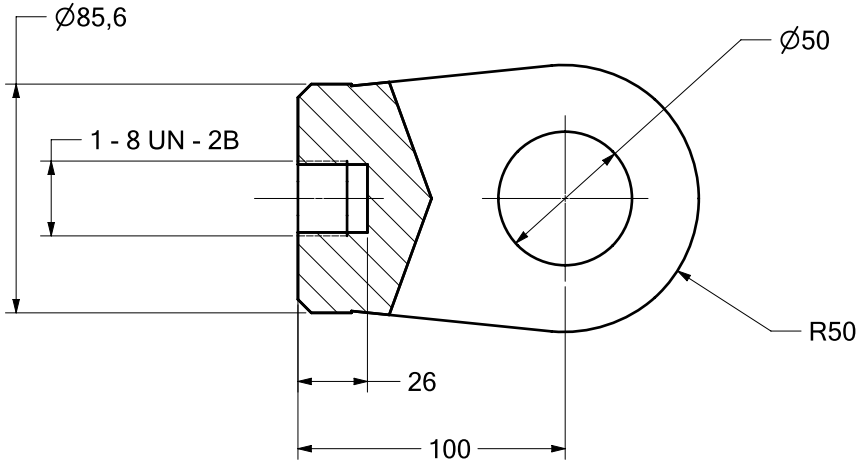

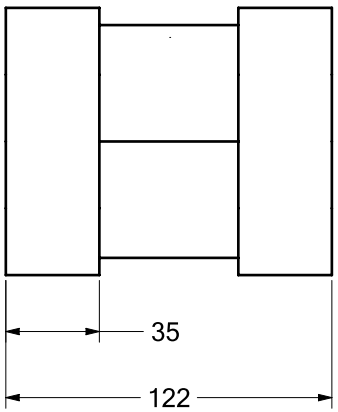

SECTION M-M
SCALE 1:2

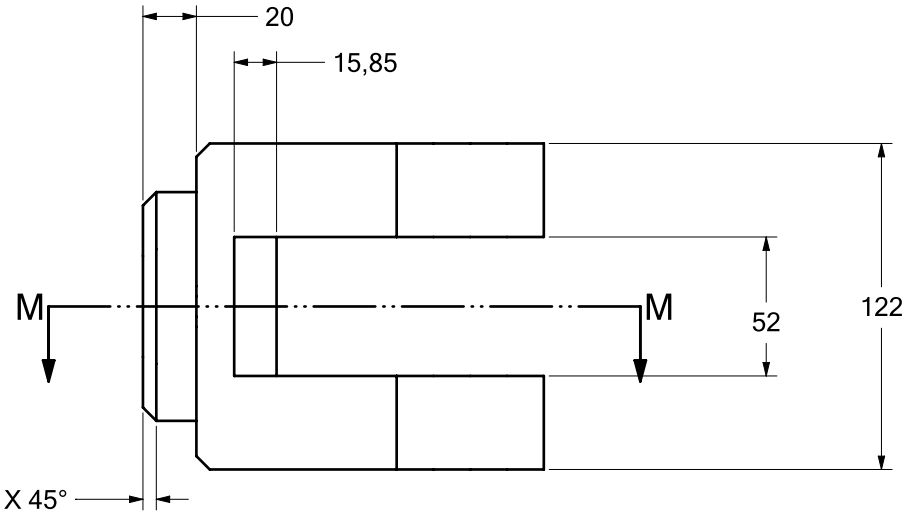

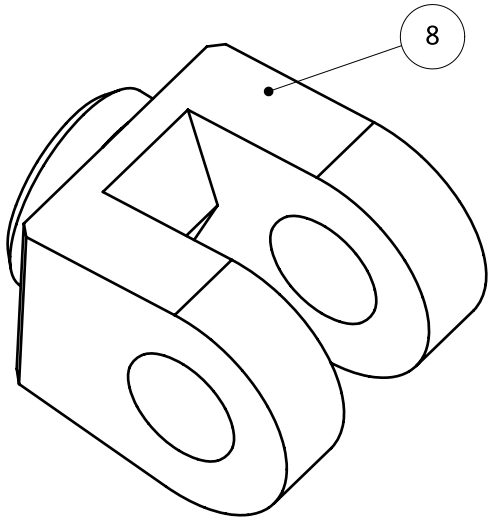

FEED DRAWING

ANSYS SPACE CLAIM®V 2022R1 I-DE-3010.00-1300-270-P56-049 - TOP CONE HYDRAULIC ACTUADOR - rev A copia.scdoc

	REV. 0	REV. A	REV. B	REV. C	REV. D	REV. E	REV. F	REV. G	REV. H	REV. J	REV. K
DATE	24/05/24	12/03/25									
DESIGN	PSUB	EAI									
EXECUTION	Roberto	Roberto									
CHECK	Leonardo	Leonardo									
APPROVAL	Perotto	Loreta									

PETROBRAS

DRAWING Nº: I-DE-3010.00-1300-270-P56-049

CLIENT:

SHEET: 6 of 7

JOB: TSUDL

CC:

AREA: BÚZIOS

TITLE: TOP CONE HYDRAULIC CYLINDER

INTERNAL

SUB/ES/PSUB-CDESC

FORM OWNED TO PETROBRAS NI-0381 REV. L

INFORMATION IN THIS DOCUMENT IS PROPERTY OF PETROBRAS, BEING PROHIBITED OUTSIDE OF THEIR PURPOSE

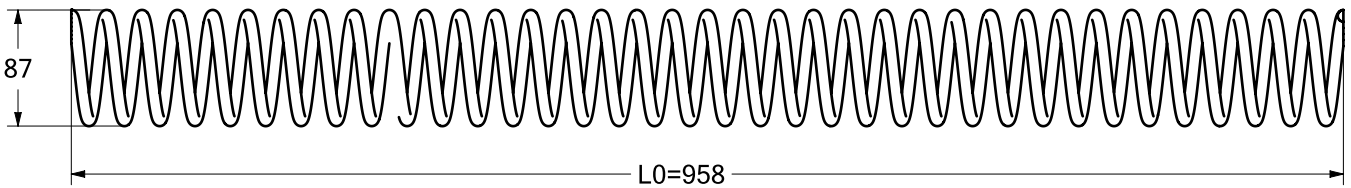

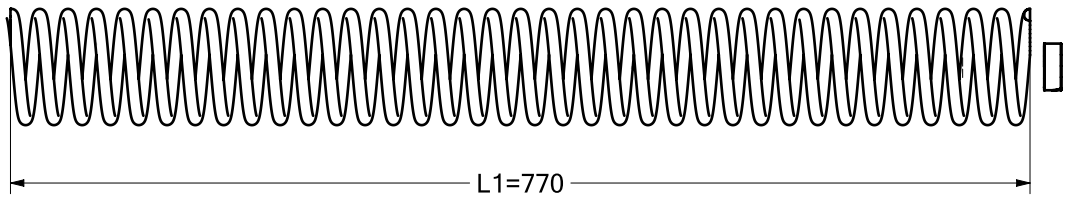

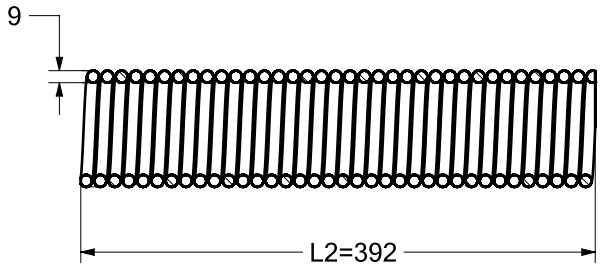

SPECIFICATION FOR CYLINDRICAL HELICAL COMPRESSION SPRING				
MATERIAL	INCONEL 718 MAX 35 HRC			
MIN. TENSILE STRENGHT	1080 MPa	ALLOWABLE STRES	605 MPa	
CALCULATION BASIS OF SHEAR MODULUS			77260 MPa	
SURFACE COATING	PTFE			
SPRING ENDS TYPE	CLOSED AND GROUND ENDS			
SPRING SPECIFICATIONS				
ACTIVE COILS	n	34	RIGHT COILED	
TOTAL COILS	n_t	36		
WIRE DIAMETER (mm)	d	9	+/- 0,08	
OUTSIDE DIAMETER (mm)	D_e	87	+ /- 1,5	
TUBE DIAMETER (OUTER GUIDE) (mm)	D_h	88,9H7		
FREE LENTGH (mm)	L0	958 +/- 15	FORCES (N)	
SPRING PRE-LOAD (mm)	L1	770	F1	738 +/- 77
SPRING MAX. COMPRESSION	L2	392	F2	2223 +/- 99

NOMINAL MINIMUM SPRING FORCE REQUIRED : F1 > 736 N AT L1 = 763mm

.

SPRING DESIGN ACC. TO BS EN 13906-1:2013

SPRING TOLERANCES ARE BASED ON PREVIOUS PROJECTS AND DIN EN 15800 QUALITY CLASS 2

SCALE 1:4

FEED DRAWING

	REV. 0	REV. A	REV. B	REV. C	REV. D	REV. E	REV. F	REV. G	REV. H	REV. J	REV. K
DATE	24/05/24	12/03/25									
DESIGN	PSUB	EAI									
EXECUTION	Roberto	Roberto									
CHECK	Leonardo	Leonardo									
APPROVAL	Perotto	Loreta									

ANSYS SPACE CLAIM®V 2022R1 I-DE-3010.00-1300-270-P56-049 - TOP CONE HYDRAULIC ACTUADOR - rev A copia.scdoc

BR PETROBRAS

SISTEMAS SUBMARINOS

DRAWING Nº: I-DE-3010.00-1300-270-P56-049

CLIENT:

SHEET: 7 of 7

JOB: TSUDL

CC:

AREA:

TITLE: TOP CONE HYDRAULIC CYLINDER

INTERNAL

SUB/ES/PSUB-CDESC

FORM OWNED TO PETROBRAS NI-0381 REV. L

INFORMATION IN THIS DOCUMENT IS PROPERTY OF PETROBRAS, BEING PROHIBITED OUTSIDE OF THEIR PURPOSE

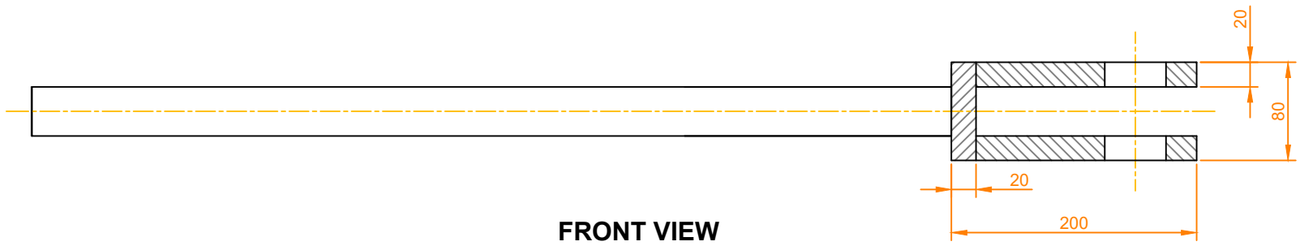

FRONT VIEW
(TIE BAR)
SCALE: 1:5

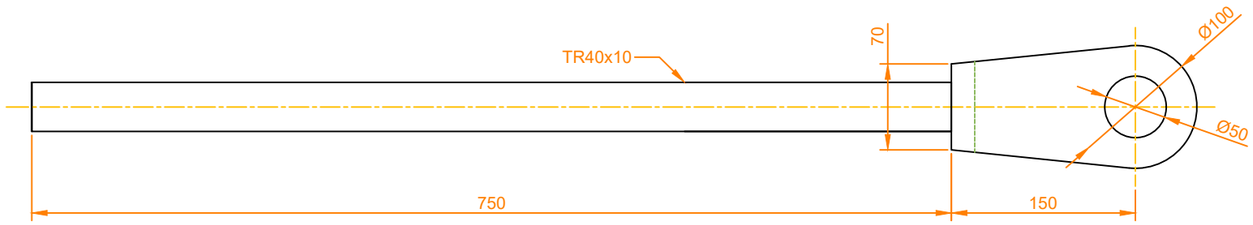

TOP VIEW
(TIE BAR)
SCALE: 1:5

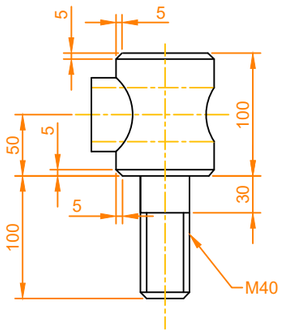

PROFILE VIEW
(BEARING)
SCALE: 1:5

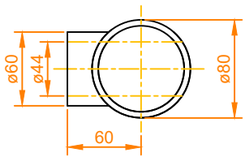

TOP VIEW
(BEARING)
SCALE: 1:5

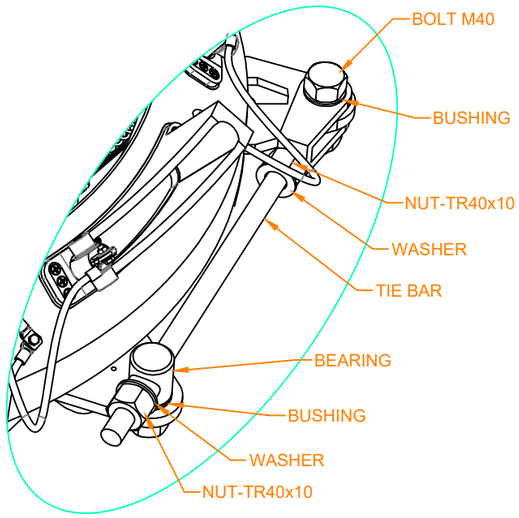

ASSEMBLY
SCALE: 1:15

MATERIAL	WEIGHT	RUGOSITY (RA)	SURFACE COATING	TREATMENT
- AISI 304 - NYLON 6.6 (BUSHING)			ANTIFOULING	

LINEAR DIMENSIONS NOT INDICATED - BOILERMAKING

DIMENSIONS (MM)	DE 2 A ≤30	>30 A ≤120	>120 A ≤400	>400 A ≤1000	>1000 A ≤2000	>2000 A ≤4000	>4000 A ≤8000	>8000 A ≤12000
TOLERANCES	±1	±3	±4	±6	±8	±11	±14	±18

LINEAR DIMENSIONS NOT INDICATED - MACHINING

DIMENSIONS (MM)	DE 0,5 A ≤3	>3 A ≤6	>6 A ≤30	>30 A ≤120	>120 A ≤400	>400 A ≤1000	>1000 A ≤2000	>2000 A ≤4000
LENGHT	±0,2	±0,3	±0,5	±0,8	±1,2	±2,0	±3,0	±4,0
DIAMETER	±0,1	±0,1	±0,2	±0,3	±0,5	±0,8	±1,2	±2,0

REFERENCE DOCUMENTS

GENERAL NOTES

FEED DESIGN

REV.	DESCRIPTION	DATE	EXEC.	CHECK	APPROV.
0	INITIAL ISSUE	21/07/2022	RTVH	CX4H	U4B8

THE DATA, OR PART THEREOF ARE PETROBRAS PROPERTY AND THUS MUST NOT BE USED IN ANY WAY WITHOUT PERMISSION

PETROLEO BRASILEIRO S.A. PETROBRAS

SUB

CLIENT OR USER: E & P

JOB OR PROJECT: FPSO UNIT

AREA OR UNIT: PRODUCTION

TITLE: ROV TIE BAR

DESIGN	DRAWN	CHECK
TDUT	RTVH	BERK
APPROV. BF7F	SIZE A3	CC
DATE 21/07/2022	SCALE INDIC.	SHEET 1 of 1

No. I-DE-3010.00-1300-270-P56-024

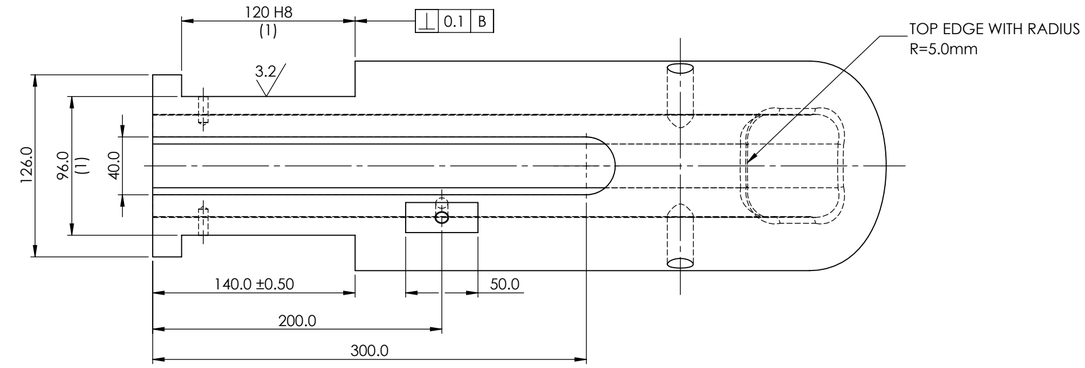

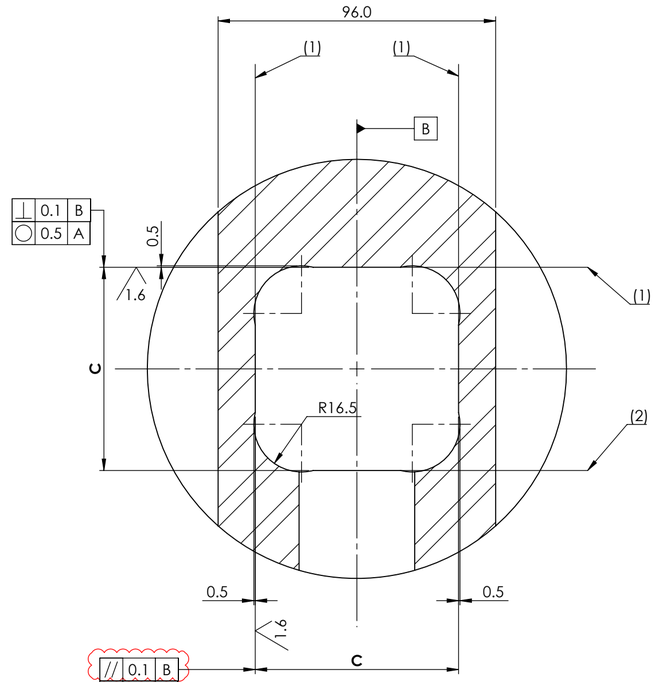

SECTION A-A

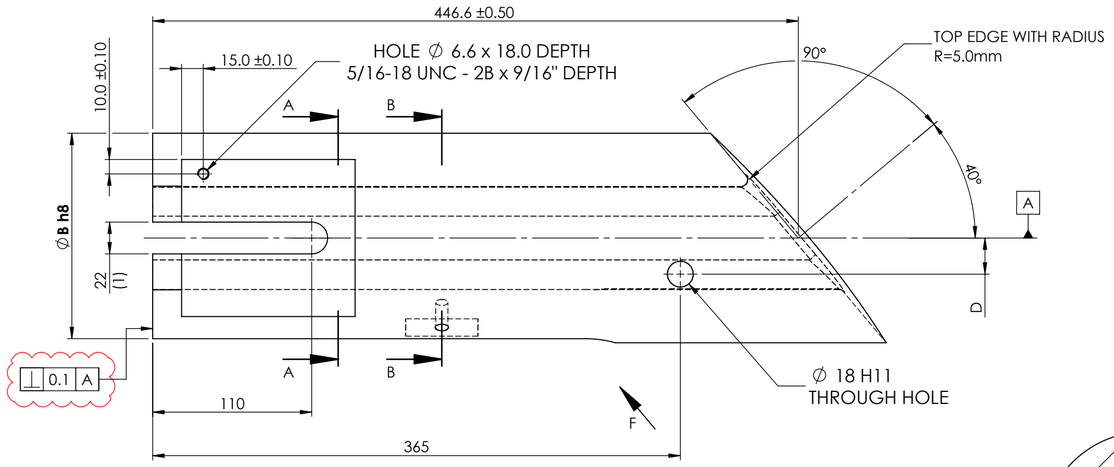

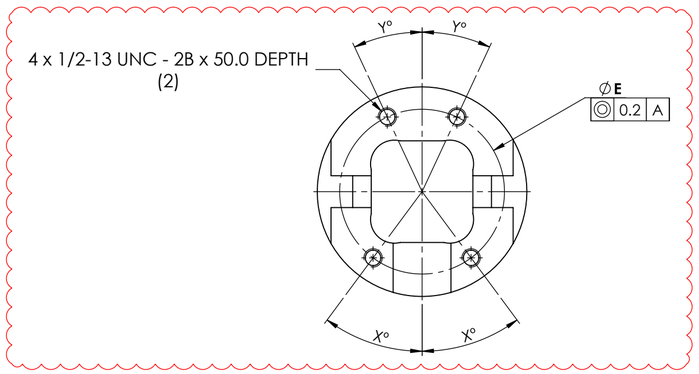

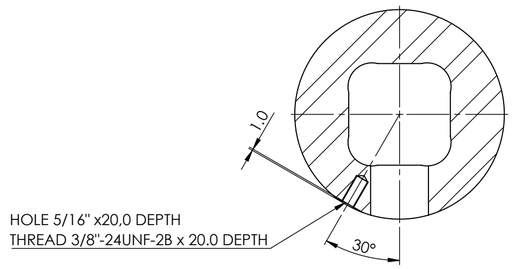

SECTION B-B

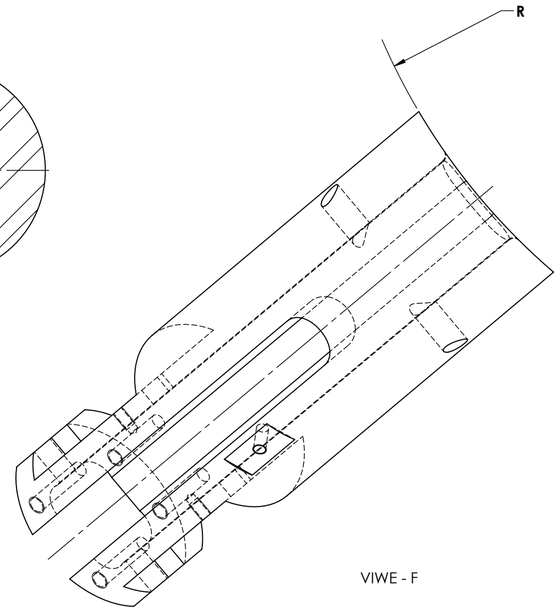

VIWE - F

I-TUBE	B	C	D	E	R	X°	Y°
26"							
28"							
30"							
32"	145.0	70.35/70.30	25.1/25.0	114.1/139.9	445.70/447.05	36.5	25
34"							
36"							
38"							
40"							
42"							
44"							
46"	155.0	80.35/80.30	30.1/30.0	124.1/123.9	622.25/623.60	33	20
48"	155.0	80.35/80.30	30.1/30.0	124.1/123.9	646.75/648.10	33	20

REFERENCE DOCUMENTS

RELATED ASSEMBLY:
I-DE-3010.00-1300-279-PPC-350

GENERAL NOTES

1. COATING:
   (1) Zi-Ni + PTFE
   (2) Zi-Ni
2. MACHINING DIMENSIONS. GD&T STUDY CONSIDERING COATING THICKNESS SHALL BE ASSESSED FOR A SLIDING ASSEMBLY.
3. ANGULAR TOLERANCE: ±0° 15'

REV.	DESCRIPTION	DATE	EXEC.	CHECK	APPROV.
D	GENERAL REVISION AS INDICATED	14/03/25	CJLZ	U4B8	NTHF
C	"R" DIMENSIONS & SURFACE COATING	29/03/22	SUB/ES	CJLZ	BERL
B	HYDRAULIC ACTUATOR REFERENCE	15/03/21	SUB/ES	CJLZ	BERL
A	"R" TGOLERANCE REVISION	28/08/20	SUB/ES	CJLZ	BERL
Ø	ORIGINAL	03/07/20	SUB/ES	CJLZ	BERL

ACCORDING TO DI-1PBR-00337, INFORMATION IN THIS DOCUMENT IS PROPERTY OF PETROBRAS, BEING PROHIBITED OUTSIDE OF THEIR PURPOSE.
FORM OWNED TO PETROBRAS N-381 - REV.M

PETROBRAS | SUB

CLIENT: E & P

JOB: FPSO UNIT

AREA: PRODUCTION

TITLE: ROUND BLOCK (BSDL-SI)

SOLIDWORKS 2018 | DE | -

SCALE: NO SCALE | SHEET 1 of 1

INTERNO

No I-DE-3010.00-1300-279-P56-355

MATERIAL: ASTM DH36 | WEIGHT (KG): 33.15 | RUGOSITY (C.L.A): 6.3

SURFACE COATING (NOTE 1)
TREATMENT -

LINEAR DIMENSIONS NOT INDICATED - BOILERMAKING

DIMENSIONS (mm)	DE 2 a ≤30	>30 a ≤120	>120 a ≤400	>400 a ≤1000	>1000 a ≤2000	>2000 a ≤4000	>4000 a ≤8000	>8000 a ≤12000
TOLERANCES	±1	±3	±4	±6	±8	±11	±14	±18

LINEAR DIMENSIONS NOT INDICATED - MACHINING

DIMENSIONS (mm)	DE 0.5 a ≤3	>3 a ≤6	>6 a ≤30	>30 a ≤120	>120 a ≤400	>400 a ≤1000	>1000 a ≤2000	>2000 a ≤4000
LENGHT	±0,2	±0,3	±0,5	±0,8	±1,2	±2,0	±3,0	±4,0
DIAMETER	±0,1	±0,1	±0,2	±0,3	±0,5	±0,8	±1,2	±2,0

A2 - 594 X 420

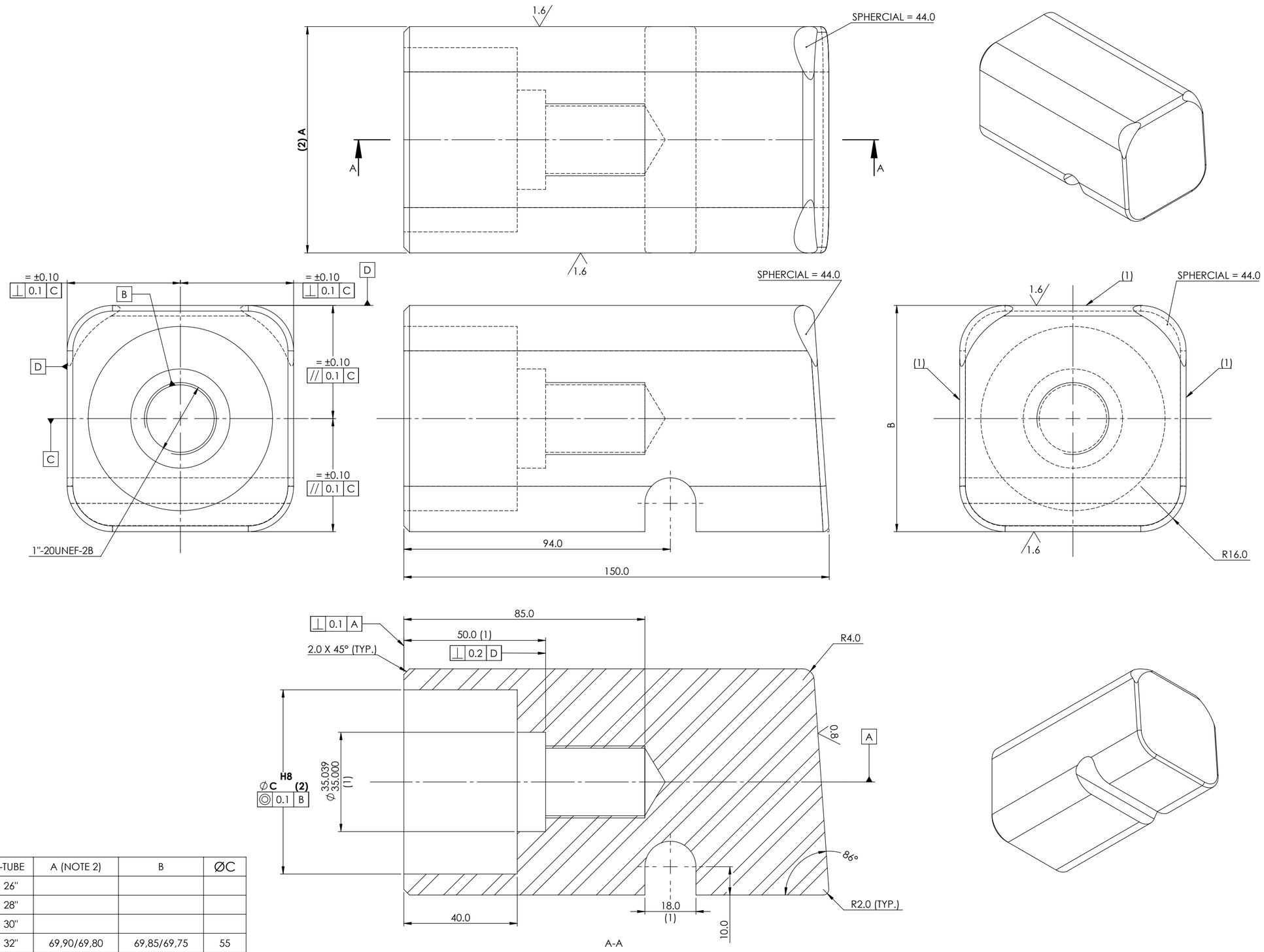

I-TUBE	A (NOTE 2)	B	ØC
26"			
28"			
30"			
32"	69,90/69,80	69,85/69,75	55
34"			
36"			
38"			
40"			
42"			
44"			
46"	79,90/79,80	79,85/79,75	65
48"	79,90/79,80	79,85/79,75	65

MATERIAL	WEIGHT (KG)	RUGOSITY (C.L.A)	SURFACE COATING	TREATMENT
SAE 1045	5.67	3.2	Zi-Ni (+ PTFE WHERE INDICATED)	QUENCH AND TEMPERED MINIMUN YIELD STRENGHT 500 MPa

LINEAR DIMENSIONS NOT INDICATED - BOILERMAKING

DIMENSIONS (mm)	DE 2 a ≤30	>30 a ≤120	>120 a ≤400	>400 a ≤1000	>1000 a ≤2000	>2000 a ≤4000	>4000 a ≤8000	>8000 a ≤12000
TOLERANCES	±1	±3	±4	±6	±8	±11	±14	±18

LINEAR DIMENSIONS NOT INDICATED - MACHINING

DIMENSIONS (mm)	DE 0.5 a ≤3	>3 a ≤6	>6 a ≤30	>30 a ≤120	>120 a ≤400	>400 a ≤1000	>1000 a ≤2000	>2000 a ≤4000
LENGHT	±0,2	±0,3	±0,5	±0,8	±1,2	±2,0	±3,0	±4,0
DIAMETER	±0,1	±0,1	±0,2	±0,3	±0,5	±0,8	±1,2	±2,0

REFERENCE DOCUMENTS

RELATED ASSEMBLY:
I-DE-3010.00-1300-279-PPC-300
I-DE-3010.00-1300-279-P56-350
I-DE-3010.00-1300-270-P56-003

GENERAL NOTES

1. Zi-Ni + PTFE
2. MACHINING DIMENSIONS. GD&T STUDY CONSIDERING COATING THICKNESS SHALL BE ASSESSED FOR A SLIDING ASSEMBLY.
3. REINFORCED LATCH BAR CONFIGURATION, COMPRISING THE FOLLOWING PARTS IN THEIR LATEST REVISIONS:
   - I-DE-3010.00-1300-279-PPC-307
   - I-DE-3010.00-1300-279-PPC-310

REV.	DESCRIPTION	DATE	EXEC.	CHECK	APPROV.
F	NOTES AND REFERENCE DOCUMENTS	25/02/25	CJLZ	BERK	NTHF
E	REINFORCED LATCH BAR	11/05/2021	ESUB/TDUT	VIOLANTE	BRUNO PINHO
D	GENERAL REVISION	07/07/20	PDDP/TIES	BRUNO PINHO	VINICIUS
C	CORNERS FILLETS	19/06/19	PDDP/TDUT	VIOLANTE	VINICIUS
B	INTERNAL THREAD LENGTH	12/06/17	PDDP/TDUT	BRUNO PINHO	VINICIUS
A	GENERAL REVISION	10/05/17	PDDP/TDUT	FLÁVIO	VINICIUS
Ø	ORIGINAL	22/12/16	PDDP/TDUT	CAPLLONCH	VINICIUS

ACCORDING TO DI-1PBR-00337, INFORMATION IN THIS DOCUMENT IS PROPERTY OF PETROBRAS, BEING PROHIBITED OUTSIDE OF THEIR PURPOSE.
FORM OWNED TO PETROBRAS N-381 - REV.M

PETROBRAS CENPES

CLIENT: E & P

JOB: FPSO UNIT

AREA: PRODUCTION

TITLE: LATCH BAR

SOLIDWORKS 2018 | DE | -

SCALE: 1 : 1 | SHEET 1 of 1

PÚBLICO

No I-DE-3010.00-1300-279-PPC-306

A2 - 594 X 420

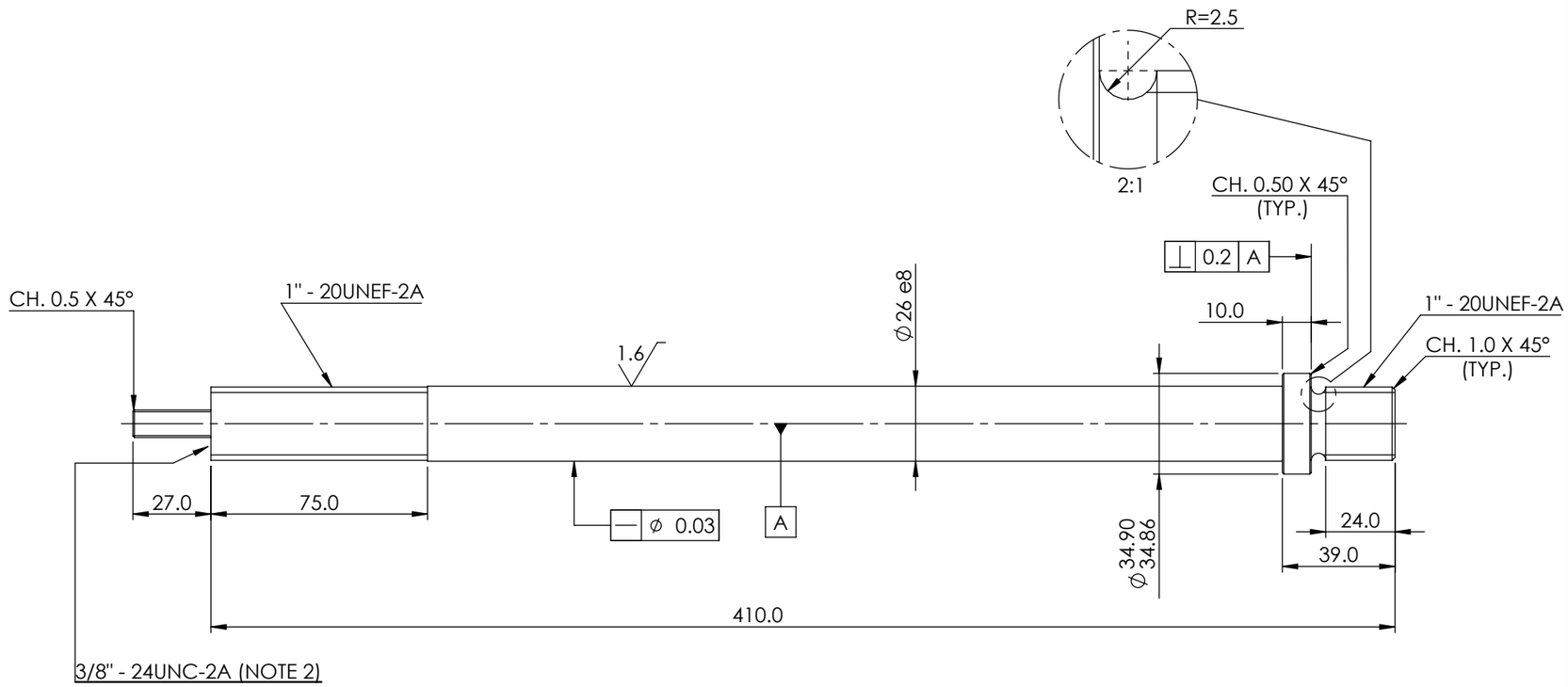

REFERENCE DOCUMENTS

RELATED ASSEMBLY:
I-DE-3010.00-1300-279-PPC-300
I-DE-3010.00-1300-279-P56-350
I-DE-3010.00-1300-270-P56-003

GENERAL NOTES

1. AXIS TO BE USED WITH THE REINFORCED LATCH BAR CONFIGURATION, COMPRISING THE FOLLOWING PARTS IN THEIR LATEST REVISIONS:
   - I-DE-3010.00-1300-279-PPC-306
   - I-DE-3010.00-1300-279-PPC-310
2. THE THREADED PIN DIMENSIONS REFER TO A LOCKING MECHANISM WITHOUT HYDRAULIC ACTUATION SYSTEM. IF THE HYDRAULIC SYSTEM IS APPLIED TO THE LOCKING MECHANISM, THE PIN CAN BE SUPRESSED FROM THE PART.

REV.	DESCRIPTION	DATE	EXEC.	CHECK.	APPROV.
D	NOTES AND REFERENCE DOCUMENTS	25/02/25	CJLZ	BERK	NTHF
C	GENERAL NOTES AND THREAD PIN	21/05/24	SUB/ES/PSUB	CX4H	U4B8
B	AXIS FOR REINFORCED LATCH BAR	15/03/21	ESUB	VIOLANTE	BRUNO PINHO
A	THREAD LENGTH	12/06/17	PDDP/TDUT	BRUNO PINHO	VINICIUS
Ø	ORIGINAL	14/12/16	PDDP/TDUT	CAPLLONCH	VINICIUS

ACCORDING TO DI-1PBR-00337, INFORMATION IN THIS DOCUMENT IS PROPERTY OF PETROBRAS, BEING PROHIBITED OUTSIDE OF THEIR PURPOSE.
FORM OWNED TO PETROBRAS N-381 - REV.M

PETROBRAS | CENPES

CLIENT: E & P

JOB: FPSO UNIT

AREA: PRODUCTION

TITLE: AXIS

SOLIDWORKS 2018 | DE | -

SCALE: 1:2 | SHEET 1 OF 1

PÚBLICO

No I-DE-3010.00-1300-279-PPC-307

MATERIAL: SAE 1045 | WEIGHT (KG): 1731.27 | RUGOSITY (C.L.A): 3.2

SURFACE COATING: Zi-Ni
TREATMENT: -

LINEAR DIMENSIONS NOT INDICATED - BOILERMAKING

DIMENSIONS (mm)	DE 2 a ≤30	>30 a ≤120	>120 a ≤400	>400 a ≤1000	>1000 a ≤2000	>2000 a ≤4000	>4000 a ≤8000	>8000 a ≤12000
TOLERANCES	±1	±3	±4	±6	±8	±11	±14	±18

LINEAR DIMENSIONS NOT INDICATED - MACHINING

DIMENSIONS (mm)	DE 0.5 a ≤3	>3 a ≤6	>6 a ≤30	>30 a ≤120	>120 a ≤400	>400 a ≤1000	>1000 a ≤2000	>2000 a ≤4000
LENGHT	±0,2	±0,3	±0,5	±0,8	±1,2	±2,0	±3,0	±4,0
DIAMETER	±0,1	±0,1	±0,2	±0,3	±0,5	±0,8	±1,2	±2,0

A3 - 420 X 297

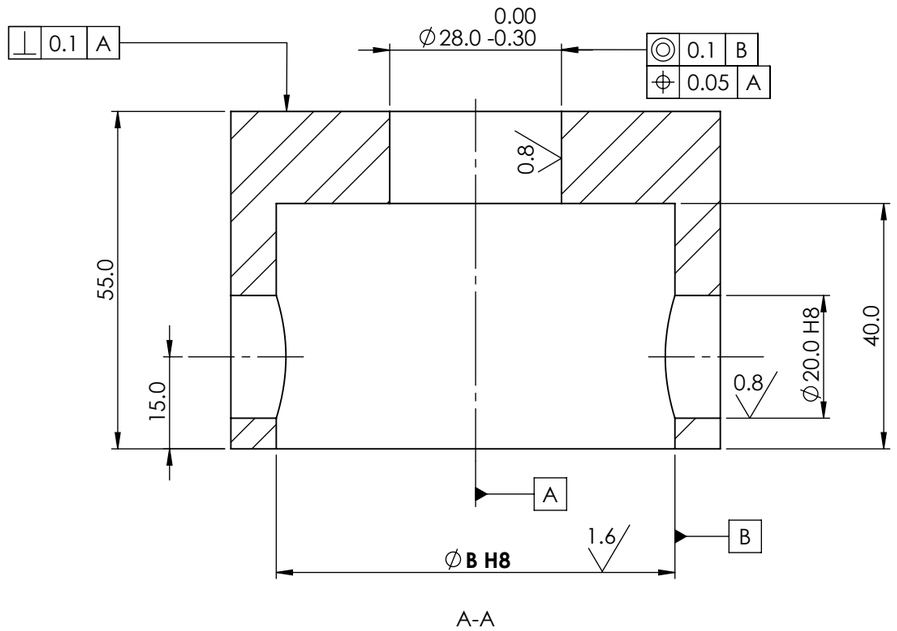

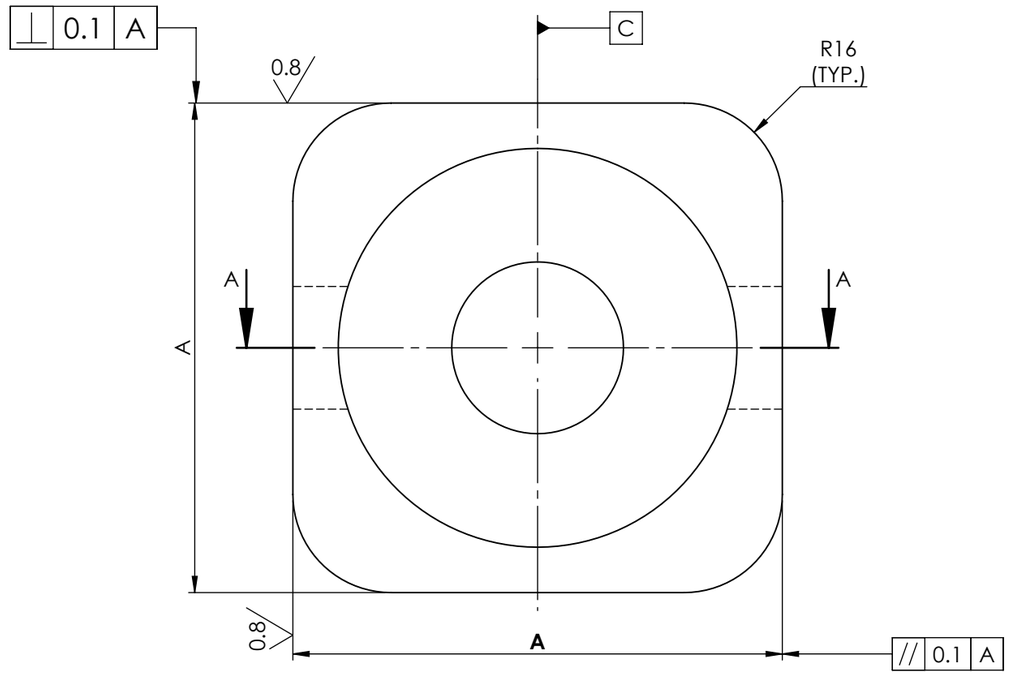

I-TUBE	A	B
26"		
28"		
30"		
32"	69.85/69.75	55.0
34"		
36"		
38"		
40"		
42"		
44"		
46"	79.85/79.75	65.0
48"	79.85/79.75	65.0

MATERIAL	WEIGHT (KG)	RUGOSITY (C.L.A)	SURFACE COATING	Zi-Ni
SAE 1045	1.50	3.2	TREATMENT	-

LINEAR DIMENSIONS NOT INDICATED - BOILERMAKING

DIMENSIONS (mm)	DE 2 a ≤30	>30 a ≤120	>120 a ≤400	>400 a ≤1000	>1000 a ≤2000	>2000 a ≤4000	>4000 a ≤8000	>8000 a ≤12000
TOLERANCES	±1	±3	±4	±6	±8	±11	±14	±18

LINEAR DIMENSIONS NOT INDICATED - MACHINING

DIMENSIONS (mm)	DE 0.5 a ≤3	>3 a ≤6	>6 a ≤30	>30 a ≤120	>120 a ≤400	>400 a ≤1000	>1000 a ≤2000	>2000 a ≤4000
LENGHT	±0,2	±0,3	±0,5	±0,8	±1,2	±2,0	±3,0	±4,0
DIAMETER	±0,1	±0,1	±0,2	±0,3	±0,5	±0,8	±1,2	±2,0

REFERENCE DOCUMENTS

RELATED ASSEMBLY:
I-DE-3010.00-1300-279-PPC-300
I-DE-3010.00-1300-279-P56-350
I-DE-3010.00-1300-270-P56-003

GENERAL NOTES

REV.	DESCRIPTION	DATE	EXEC.	CHECK.	APPROV.
C	REFERENCE DOCUMENTS	25/02/25	CJLZ	BERK	NTHF
B	CORNERS FILLETS	26/08/19	PDDP/TDUT	VIOLANTE	VINICIUS
A	HOLES REMOVAL	01/06/17	PDDP/TDUT	BRUNO PINHO	VINICIUS
0	ORIGINAL	14/12/16	PDDP/TDUT	CAPLLONCH	VINICIUS

ACCORDING TO DI-1PBR-00337, INFORMATION IN THIS DOCUMENT IS PROPERTY OF PETROBRAS, BEING PROHIBITED OUTSIDE OF THEIR PURPOSE.
FORM OWNED TO PETROBRAS N-381 - REV.M

PETROBRAS CENPES

CLIENT: E & P

JOB: FPSO UNIT

AREA: PRODUCTION

TITLE: REACTION BLOCK

SOLIDWORKS 2018 | DE | -

SCALE: 1:1 | SHEET 1 OF 1

PÚBLICO

No I-DE-3010.00-1300-279-PPC-308

A3 - 420 X 297

I-TUBE	A	B	C
26"			
28"			
30"			
32"	51.3	54.0	12.0
34"			
36"			
38"			
40"			
42"			
44"			
46"	57.0	63.0	14.0
48"	65.0	57.0	42.0

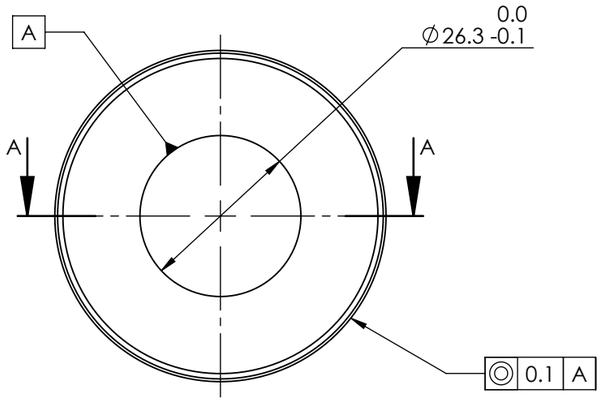

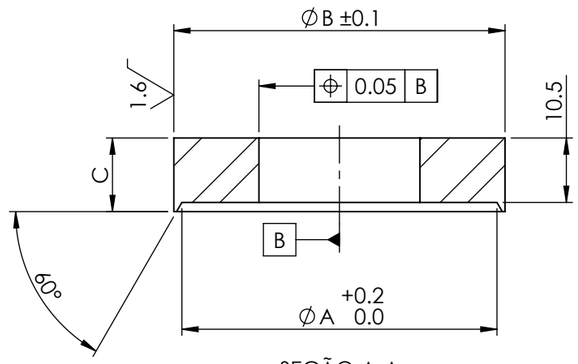

SEÇÃO A-A

REFERENCE DOCUMENTS

RELATED ASSEMBLY:
I-DE-3010.00-1300-279-PPC-300

GENERAL NOTES

REV.	DESCRIPTION	DATE	EXEC.	CHECK.	APPROV.
B	MATERIAL AN SURFACE COATING	22/05/24	SUB/ES/PSUB	CX4H	U4B8
A	AS INDICATED	08/11/22	TGC6	CX4H	U4B8
Ø	ORIGINAL	14/12/16	PDDP/TDUT	CAPLLONCH	VINICIUS

ACCORDING TO DI-1PBR-00337, INFORMATION IN THIS DOCUMENT IS PROPERTY OF PETROBRAS, BEING PROHIBITED OUTSIDE OF THEIR PURPOSE.
FORM OWNED TO PETROBRAS N-381 - REV.M

PETROBRAS CENPES

CLIENT: E & P

JOB: FPSO UNIT

AREA: PRODUCTION

TITLE: STRUCTURAL WASHER

SOLIDWORKS 2018 | DE | -

SCALE: 1:1 | SHEET 1 OF 1

PÚBLICO

No I-DE-3010.00-1300-279-PPC-309

MATERIAL: SAE 1020 | WEIGHT (KG): 146.82 | RUGOSITY (C.L.A): - | SURFACE COATING: Zi-Ni | TREATMENT: -

LINEAR DIMENSIONS NOT INDICATED - BOILERMAKING

DIMENSIONS (mm)	DE 2 a ≤30	>30 a ≤120	>120 a ≤400	>400 a ≤1000	>1000 a ≤2000	>2000 a ≤4000	>4000 a ≤8000	>8000 a ≤12000
TOLERANCES	±1	±3	±4	±6	±8	±11	±14	±18

LINEAR DIMENSIONS NOT INDICATED - MACHINING

DIMENSIONS (mm)	DE 0.5 a ≤3	>3 a ≤6	>6 a ≤30	>30 a ≤120	>120 a ≤400	>400 a ≤1000	>1000 a ≤2000	>2000 a ≤4000
LENGHT	±0,2	±0,3	±0,5	±0,8	±1,2	±2,0	±3,0	±4,0
DIAMETER	±0,1	±0,1	±0,2	±0,3	±0,5	±0,8	±1,2	±2,0

A3 - 420 X 297

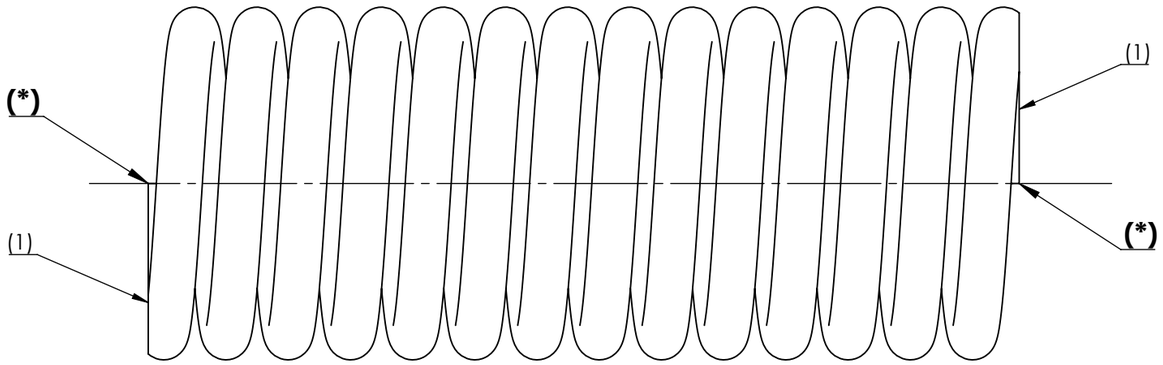

COMPRESSION SPRING DESIGN - SEE NOTE 2

MATERIAL: INCONEL 718 (HARDNESS LESS THAN 35 HRC)				
LEFT HAND				
SQUARED AND GROUND END **(*)**				
I-TUBE		**DN 48"/46"**	**DN 32"**	
ACTIVE COILS	N	10	10	
TOTAL COILS	Nt	12	12	
WIRE DIAMETER	d	7.5	7.5	mm
OUTSIDE DIAMETER	De	57.5	52.5	mm
FREE LENGTH	L	144.0	134.7	mm
SOLID LENGTH	Ls	90.0	90.0	
TEST				
FORCE	F1	43.90	27.30	kgf
		430.3	267.4	N
LENGTH	L1	127.0	127.0	mm
FORCE	F2	121.3	133.4	kgf
		1189.7	1309.0	N
LENGTH	L2	97.0	97.0	mm

MATERIAL	WEIGHT (KG)	RUGOSITY (C.L.A)	SURFACE COATING	PTFE
Inconel(R) 718	810.93	-	TREATMENT	-

LINEAR DIMENSIONS NOT INDICATED - BOILERMAKING

DIMENSIONS (mm)	DE 2 a ≤30	>30 a ≤120	>120 a ≤400	>400 a ≤1000	>1000 a ≤2000	>2000 a ≤4000	>4000 a ≤8000	>8000 a ≤12000
TOLERANCES	±1	±3	±4	±6	±8	±11	±14	±18

LINEAR DIMENSIONS NOT INDICATED - MACHINING

DIMENSIONS (mm)	DE 0.5 a ≤3	>3 a ≤6	>6 a ≤30	>30 a ≤120	>120 a ≤400	>400 a ≤1000	>1000 a ≤2000	>2000 a ≤4000
LENGHT	±0,2	±0,3	±0,5	±0,8	±1,2	±2,0	±3,0	±4,0
DIAMETER	±0,1	±0,1	±0,2	±0,3	±0,5	±0,8	±1,2	±2,0

REFERENCE DOCUMENTS

RELATED ASSEMBLY:
I-DE-3010.00-1300-279-PPC-300
I-DE-3010.00-1300-279-P56-350
I-DE-3010.00-1300-270-P56-003

GENERAL NOTES

(1) - DO NOT PAINT THE ENDING FACES.

1 - SPRING TO BE USED WITH THE REINFORCED LATCH BAR CONFIGURATION, COMPRISING THE FOLLOWING PARTS IN THEIR LATEST REVISIONS:
- I-DE-3010.00-1300-279-PPC-306
- I-DE-3010.00-1300-279-PPC-307

2 - PLEASE REFER TO CONTRACTUAL TECHNICAL SPECIFICATION FOR FURTHER DETAILS ON SPRING DESIGN AND MANUFACTURING.

REV.	DESCRIPTION	DATE	EXEC.	CHECK.	APPROV.
G	NOTES AND REFERENCE DOCUMENTS	24/02/25	CJLZ	BERK	NTHF
F	SPRING PARAMETERS AND MATERIAL	22/05/24	SUB/ES/PSUB	CX4H	U4B8
E	GENERAL REVISION	08/11/22	ESUB	VIOLANTE	BRUNO PINHO
D	DESIGN PREMISES	22/07/22	ESUB	VOLANTE	BRUNO PINHO
C	SPRING FOR REINFORCED LATCH BAR	15/03/21	ESUB	VINICIUS	BRUNO PINHO
B	ADDED NOTE	01/06/17	PDDP/TDUT	BRUNO PINHO	VINICIUS
A	SURFACE COATING	10/05/17	PDDP/TDUT	BRUNO PINHO	VINICIUS
Ø	ORIGINAL	14/12/16	pddp/tdut	CAPLLONCH	VINICIUS

ACCORDING TO DI-1PBR-00337, INFORMATION IN THIS DOCUMENT IS PROPERTY OF PETROBRAS, BEING PROHIBITED OUTSIDE OF THEIR PURPOSE.
FORM OWNED TO PETROBRAS N-381 - REV.M

PETROBRAS | CENPES

CLIENT: E & P

JOB: FPSO UNIT

AREA: PRODUCTION

TITLE: SPRING

SOLIDWORKS 2018 | DE | -

SCALE: NO SCALE | SHEET 1 OF 1

PÚBLICO

No I-DE-3010.00-1300-279-PPC-310

A3 - 420 X 297

I-TUBE	A	B	C
26"			
28"			
30"			
32"	60.0	52.0	37.0
34"			
36"			
38"			
40"			
42"			
44"			
46"	65.0	57.0	42.0
48"	65.0	57.0	42.0

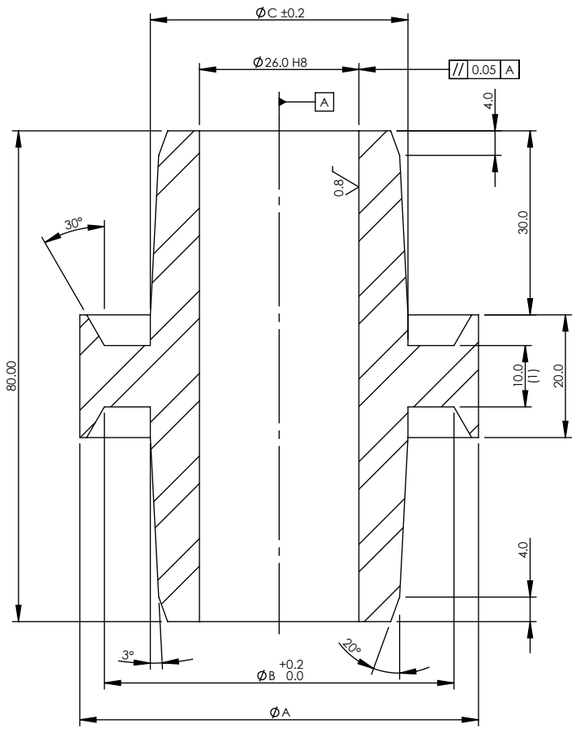

SECTION A-A

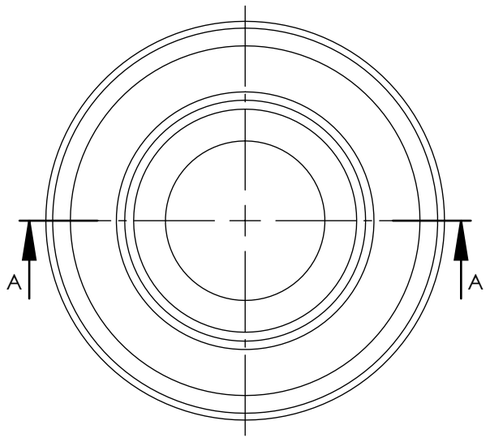

MATERIAL	WEIGHT (KG)	RUGOSITY (C.L.A)	SURFACE COATING	Zi-Ni + PTFE (EXCEPT WHERE INDICATED)
SAE 1020	679.54	3.2	TREATMENT	-

LINEAR DIMENSIONS NOT INDICATED - BOILERMAKING

DIMENSIONS (mm)	DE 2 a ≤30	>30 a ≤120	>120 a ≤400	>400 a ≤1000	>1000 a ≤2000	>2000 a ≤4000	>4000 a ≤8000	>8000 a ≤12000
TOLERANCES	±1	±3	±4	±6	±8	±11	±14	±18

LINEAR DIMENSIONS NOT INDICATED - MACHINING

DIMENSIONS (mm)	DE 0.5 a ≤3	>3 a ≤6	>6 a ≤30	>30 a ≤120	>120 a ≤400	>400 a ≤1000	>1000 a ≤2000	>2000 a ≤4000
LENGHT	±0,2	±0,3	±0,5	±0,8	±1,2	±2,0	±3,0	±4,0
DIAMETER	±0,1	±0,1	±0,2	±0,3	±0,5	±0,8	±1,2	±2,0

REFERENCE DOCUMENTS

RELATED ASSEMBLY:
I-DE-3010.00-1300-279-PPC-300
I-DE-3010.00-1300-279-PX9-350

GENERAL NOTES

(1) - ONLY Zi-Ni (DO NOT APPLY PTFE)

REV.	DESCRIPTION	DATE	EXEC.	CHECK.	APPROV.
D	REFERENCE DOCUMENTS	24/02/25	CJLZ	BERK	NTHF
C	MATERIAL AND SURFACE COATING	22/05/24	SUB/ES/PSUB	CX4H	U4B8
B	AS INDICATED	30/03/22	BERK	CX4H	U4B8
A	SURFACE COATING	10/05/17	PDDP/TDUT	BRUNO PINHO	VINICIUS
Ø	ORIGINAL	14/12/16	PDDP/TDUT	CAPLLONCH	VINICIUS

ACCORDING TO DI-1PBR-00337, INFORMATION IN THIS DOCUMENT IS PROPERTY OF PETROBRAS, BEING PROHIBITED OUTSIDE OF THEIR PURPOSE.
FORM OWNED TO PETROBRAS N-381 - REV.M

PETROBRAS CENPES

CLIENT: E & P

JOB: FPSO UNIT

AREA: PRODUCTION

TITLE: CENTRALIZERs

SOLIDWORKS 2018 | DE | -

SCALE: 1:1 | SHEET 1 OF 1

PÚBLICO

No I-DE-3010.00-1300-315-PPC-311

A3 - 420 X 297

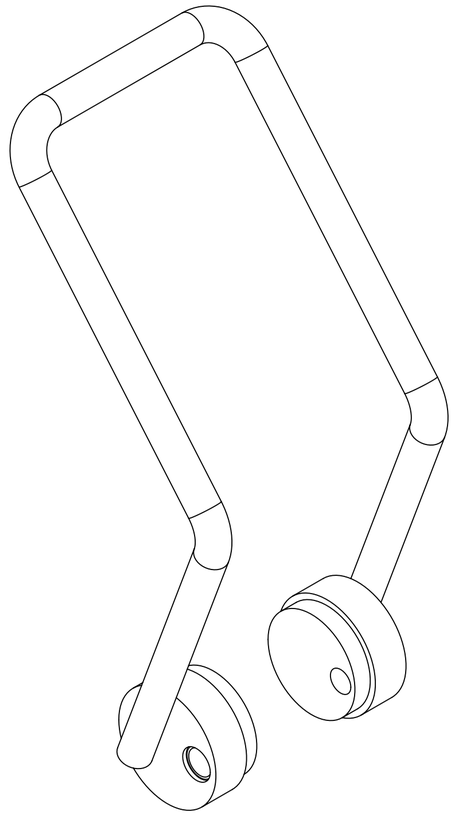

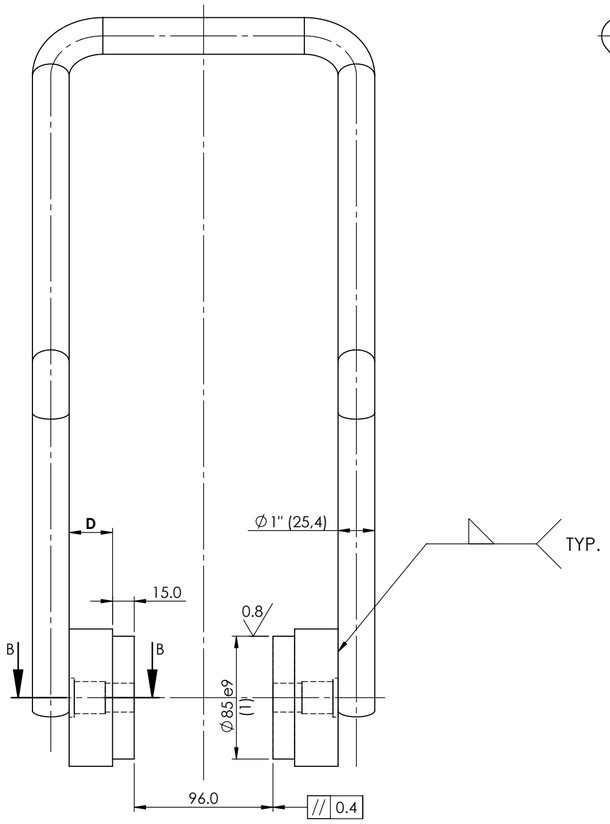

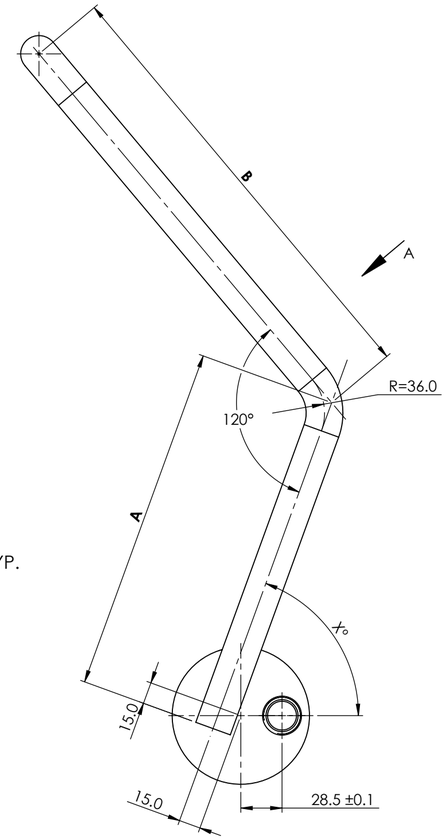

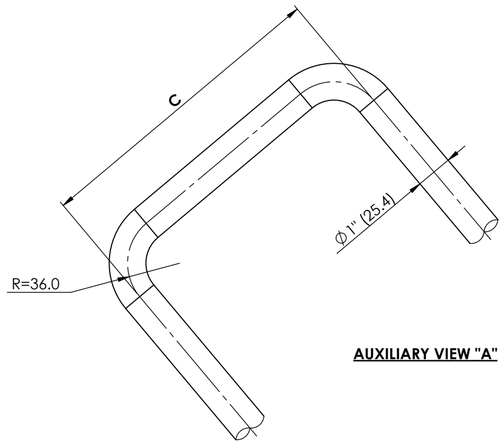

AUXILIARY VIEW "A"

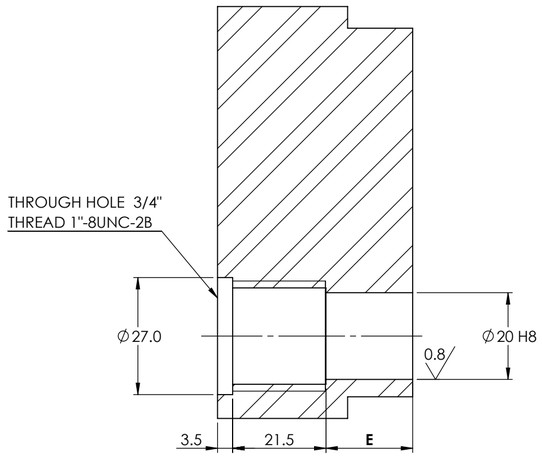

SECTION B-B

I-TUBE	A	B	C	D	E	X°
26"						
28"						
30"						
32"	285	265	207.4	28	18	60
34"						
36"						
38"						
40"						
42"						
44"						
46"	240	315	211.4	30	20	70
48"	240	315	211.4	30	20	70

REFERENCE DOCUMENTS

RELATED ASSEMBLY:
I-DE-3010.00-1300-279-P56-350
I-DE-3010.00-1300-279-P56-003

GENERAL NOTES

1. COATING:
   (1) Zi-Ni WITHOUT ANTI-FOULING

REV.	DESCRIPTION	DATE	EXEC.	CHECK	APPROV.
C	GENERAL REVISION	18/03/25	CJLZ	U4B8	NTHF
B	THREAD LENGHT	25/07/22	RTVH	BERK	BEII
A	HANDLER DESIGN FOR AUTOMATED BSDL-SI	30/03/22	SUB/ES	CX4H	BERL
Ø	ORIGINAL	03/07/20	SUB/ES	CJLZ	BERL

ACCORDING TO DI-1PBR-00337, INFORMATION IN THIS DOCUMENT IS PROPERTY OF PETROBRAS, BEING PROHIBITED OUTSIDE OF THEIR PURPOSE.
FORM OWNED TO PETROBRAS N-381 - REV.M

PETROBRAS | SUB

CLIENT: E & P

JOB: FPSO UNIT

AREA: PRODUCTION

TITLE: HANDLER (BSDL-SI)

SOLIDWORKS 2018 | DE | -

SCALE: NO SCALE | SHEET 1 of 1

PÚBLICO

No I-DE-3010.00-1300-279-P56-362

MATERIAL: ASTM A36 | WEIGHT (KG): 9.52 | RUGOSITY (C.L.A): -

SURFACE COATING: ANTIFOULING

TREATMENT: -

LINEAR DIMENSIONS NOT INDICATED - BOILERMAKING

DIMENSIONS (mm)	DE 2 a ≤30	>30 a ≤120	>120 a ≤400	>400 a ≤1000	>1000 a ≤2000	>2000 a ≤4000	>4000 a ≤8000	>8000 a ≤12000
TOLERANCES	±1	±3	±4	±6	±8	±11	±14	±18

LINEAR DIMENSIONS NOT INDICATED - MACHINING

DIMENSIONS (mm)	DE 0.5 a ≤3	>3 a ≤6	>6 a ≤30	>30 a ≤120	>120 a ≤400	>400 a ≤1000	>1000 a ≤2000	>2000 a ≤4000
LENGHT	±0,2	±0,3	±0,5	±0,8	±1,2	±2,0	±3,0	±4,0
DIAMETER	±0,1	±0,1	±0,2	±0,3	±0,5	±0,8	±1,2	±2,0

A2 - 594 X 420

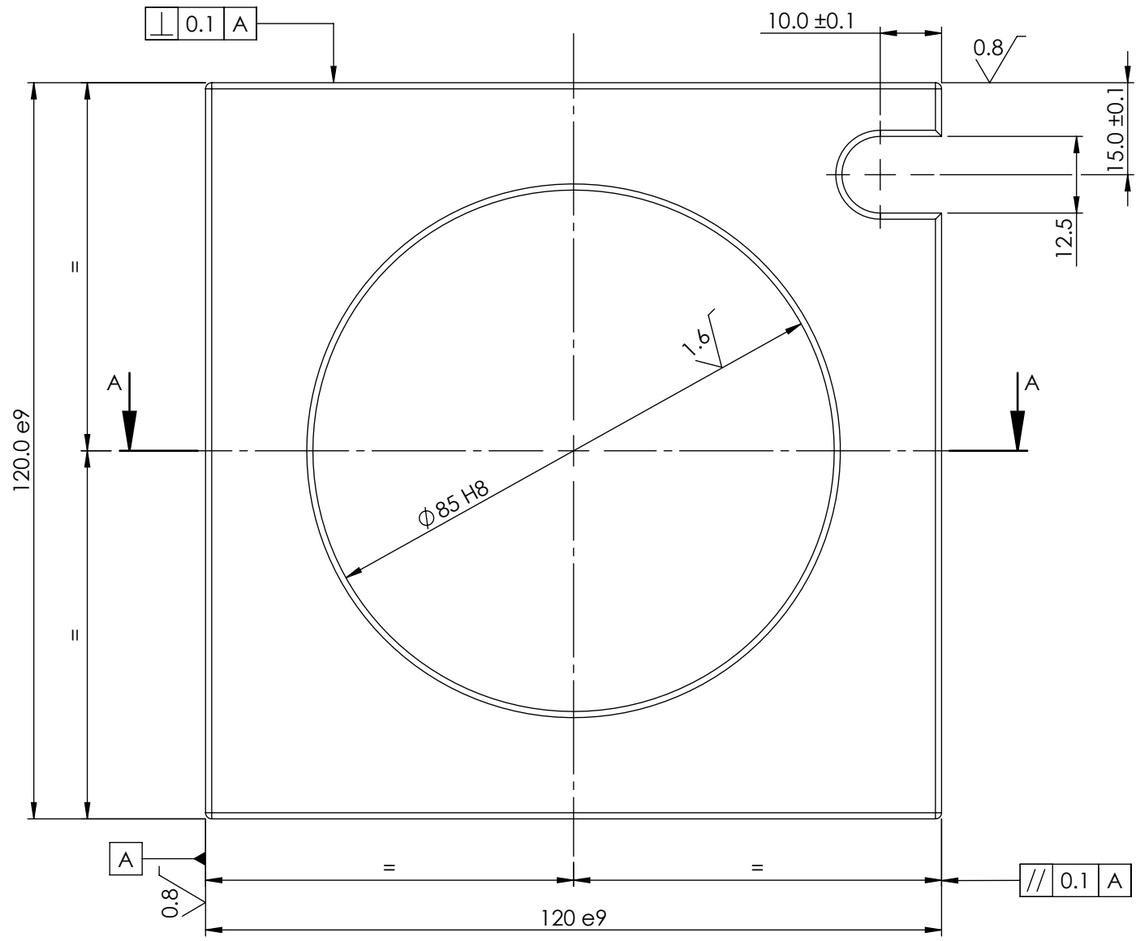

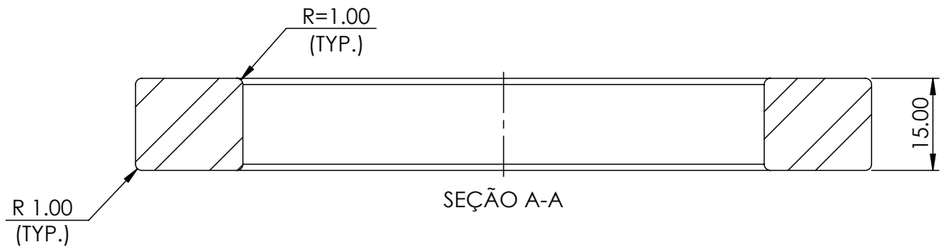

SEÇÃO A-A

REFERENCE DOCUMENTS

RELATED ASSEMBLY:
I-DE-3010.00-1300-279-PPC-300
I-DE-3010.00-1300-279-P56-350
I-DE-3010.00-1300-270-P56-003

GENERAL NOTES

REV.	DESCRIPTION	DATE	EXEC.	CHECK.	APPROV.
A	REFERENCE DOCUMENTS	25/02/25	CJLZ	BERK	NTHF
Ø	ORIGINAL	14/12/16	PDDP/TDUT	CAPLLONCH	VINICIUS

ACCORDING TO DI-1PBR-00337, INFORMATION IN THIS DOCUMENT IS PROPERTY OF PETROBRAS, BEING PROHIBITED OUTSIDE OF THEIR PURPOSE.
FORM OWNED TO PETROBRAS N-381 - REV.M

PETROBRAS CENPES

CLIENT: E & P

JOB: FPSO UNIT

AREA: PRODUCTIN

TITLE: SLIDING PLATE

SOLIDWORKS 2018 | DE | -

SCALE: 1:1 | SHEET 1 OF 1

PÚBLICO

No I-DE-3010.00-1300-279-PPC-313

MATERIAL: SAE 1045 | WEIGHT (KG): 1.00 | RUGOSITY (C.L.A): - | SURFACE COATING: Zi-Ni + PTFE | TREATMENT: -

LINEAR DIMENSIONS NOT INDICATED - BOILERMAKING

DIMENSIONS (mm)	DE 2 a ≤30	>30 a ≤120	>120 a ≤400	>400 a ≤1000	>1000 a ≤2000	>2000 a ≤4000	>4000 a ≤8000	>8000 a ≤12000
TOLERANCES	±1	±3	±4	±6	±8	±11	±14	±18

LINEAR DIMENSIONS NOT INDICATED - MACHINING

DIMENSIONS (mm)	DE 0.5 a ≤3	>3 a ≤6	>6 a ≤30	>30 a ≤120	>120 a ≤400	>400 a ≤1000	>1000 a ≤2000	>2000 a ≤4000
LENGHT	±0,2	±0,3	±0,5	±0,8	±1,2	±2,0	±3,0	±4,0
DIAMETER	±0,1	±0,1	±0,2	±0,3	±0,5	±0,8	±1,2	±2,0

A3 - 420 X 297

I-TUBE	A	B
26"		
28"		
30"		
32"	73.0	47.0
34"		
36"		
38"		
40"		
42"		
44"		
46"	69.0	43.0
48"	69.0	43.0

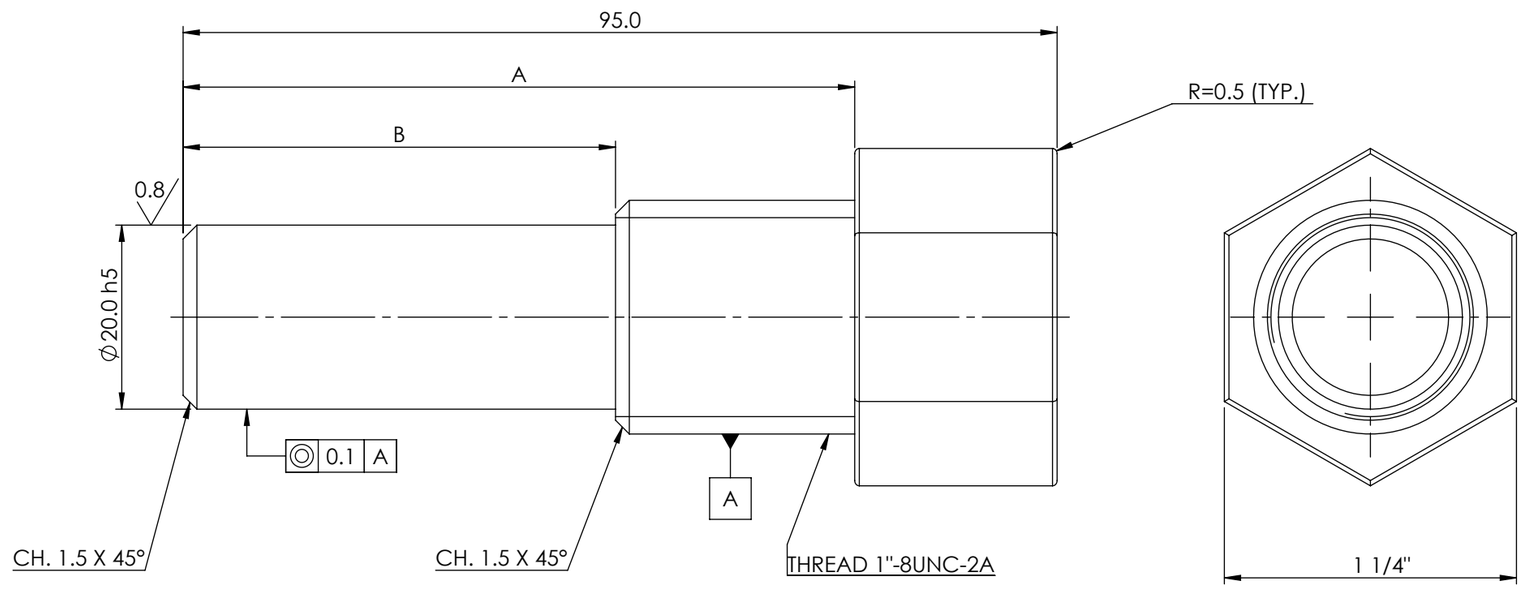

REFERENCE DOCUMENTS

RELATED ASSEMBLY:
I-DE-3010.00-1300-279-PPC-300
I-DE-3010.00-1300-279-P56-350
I-DE-3010.00-1300-270-P56-003

GENERAL NOTES

REV.	DESCRIPTION	DATE	EXEC.	CHECK.	APPROV.
B	REFERENCE DOCUMENTS	25/02/25	CJLZ	BERK	NTHF
A	BOLT LENGTH	22/07/22	ESUB	VIOLANTE	BRUNO
Ø	ORIGINAL	24/01/17	PDDP/TDUT	CAPLLONCH	VINICIUS

ACCORDING TO DI-1PBR-00337, INFORMATION IN THIS DOCUMENT IS PROPERTY OF PETROBRAS, BEING PROHIBITED OUTSIDE OF THEIR PURPOSE.
FORM OWNED TO PETROBRAS N-381 - REV.M

PETROBRAS CENPES

CLIENT: E & P

JOB: FPSO UNIT

AREA: PRODUCTION

TITLE: PIVOT BOLT

SOLIDWORKS 2018 | DE | -

SCALE: 1.5 : 1 | SHEET 1 OF 1

INTERNO

No I-DE-3010.00-1300-279-PPC-314

MATERIAL: SAE 1045 | WEIGHT (KG): 0.37 | RUGOSITY (C.L.A): - | SURFACE COATING: Zi-Ni | TREATMENT: -

LINEAR DIMENSIONS NOT INDICATED - BOILERMAKING

DIMENSIONS (mm)	DE 2 a ≤30	>30 a ≤120	>120 a ≤400	>400 a ≤1000	>1000 a ≤2000	>2000 a ≤4000	>4000 a ≤8000	>8000 a ≤12000
TOLERANCES	±1	±3	±4	±6	±8	±11	±14	±18

LINEAR DIMENSIONS NOT INDICATED - MACHINING

DIMENSIONS (mm)	DE 0.5 a ≤3	>3 a ≤6	>6 a ≤30	>30 a ≤120	>120 a ≤400	>400 a ≤1000	>1000 a ≤2000	>2000 a ≤4000
LENGHT	±0,2	±0,3	±0,5	±0,8	±1,2	±2,0	±3,0	±4,0
DIAMETER	±0,1	±0,1	±0,2	±0,3	±0,5	±0,8	±1,2	±2,0

A3 - 420 X 297

I-TUBE	A	B
26"		
28"		
30"		
32"	54.0	175.0
34"		
36"		
38"		
40"		
42"		
44"		
46"	59.0	175.0
48"	59.0	175.0

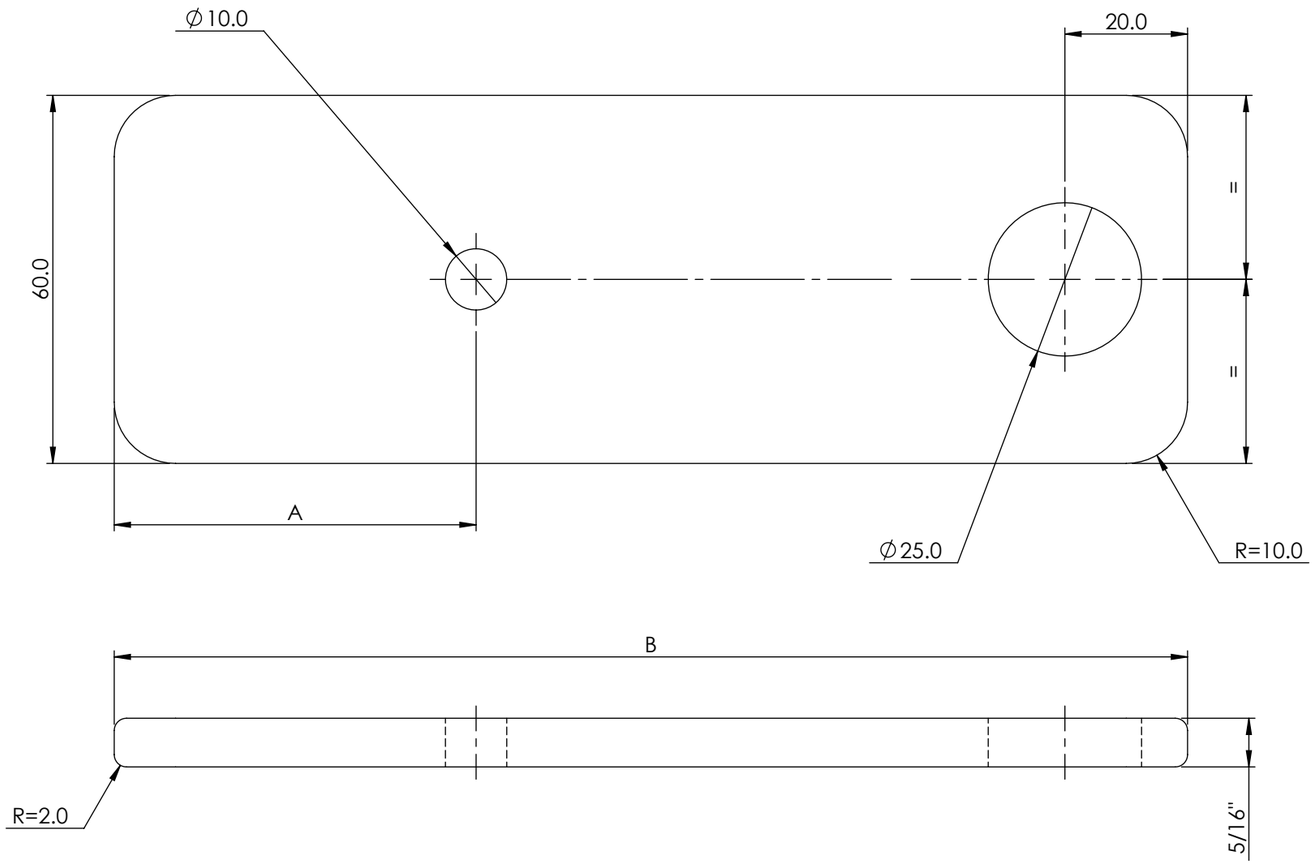

REFERENCE DOCUMENTS

RELATED ASSEMBLY:
I-DE-3010.00-1300-279-PPC-300
I-DE-3010.00-1300-279-P56-350
I-DE-3010.00-1300-270-P56-003

GENERAL NOTES

1. Zi-Ni
2. AFTER Zi-Ni, PAINT WITH ANTIFOULING PAINT OF COLOR DIFERENT FROM THE PAINTED ONE ON THE MAIN STRUCUTRE.
3. THIS PART REFER TO A LOCKING MECHANISM WITHOUT HYDRAULIC ACTUATION SYSTEM. IF THE HYDRAULIC SYSTEM IS APPLIED TO THE LOCKING MECHANISM, THIS PART SHALL BE SUPRESSED FROM LOCKING MECHANISM DESIGN.

REV.	DESCRIPTION	DATE	EXEC.	CHECK.	APPROV.
C	NOTES AND REFERENCE DOCUMENTS	25/02/25	CJLZ	BERK	NTHF
B	DESIGN REVIEW	30/03/22	BERK	CX4H	BERL
A	INCLUDED R=10.0	10/05/17	PDDP/TDUT	FLÁVIO	VINICIUS
Ø	ORIGINAL	21/02/17	PDDP/TDUT	CAPLLONCH	VINICIUS

ACCORDING TO DI-1PBR-00337, INFORMATION IN THIS DOCUMENT IS PROPERTY OF PETROBRAS, BEING PROHIBITED OUTSIDE OF THEIR PURPOSE.
FORM OWNED TO PETROBRAS N-381 - REV.M

PETROBRAS | CENPES

CLIENT: E & P

JOB: FPSO UNIT

AREA: PRODUCTION

TITLE: EYE PLATE

SOLIDWORKS 2018 | DE | -

SCALE: 1 : 1 | SHEET 1 OF 1

INTERNO

No I-DE-3010.00-1300-279-PPC-318

MATERIAL: SAE 1045 | WEIGHT (KG): 0.61 | RUGOSITY (C.L.A): -

SURFACE COATING | GENERAL NOTES

TREATMENT -

LINEAR DIMENSIONS NOT INDICATED - BOILERMAKING

DIMENSIONS (mm)	DE 2 a ≤30	>30 a ≤120	>120 a ≤400	>400 a ≤1000	>1000 a ≤2000	>2000 a ≤4000	>4000 a ≤8000	>8000 a ≤12000
TOLERANCES	±1	±3	±4	±6	±8	±11	±14	±18

LINEAR DIMENSIONS NOT INDICATED - MACHINING

DIMENSIONS (mm)	DE 0.5 a ≤3	>3 a ≤6	>6 a ≤30	>30 a ≤120	>120 a ≤400	>400 a ≤1000	>1000 a ≤2000	>2000 a ≤4000
LENGHT	±0,2	±0,3	±0,5	±0,8	±1,2	±2,0	±3,0	±4,0
DIAMETER	±0,1	±0,1	±0,2	±0,3	±0,5	±0,8	±1,2	±2,0

A3 - 420 X 297

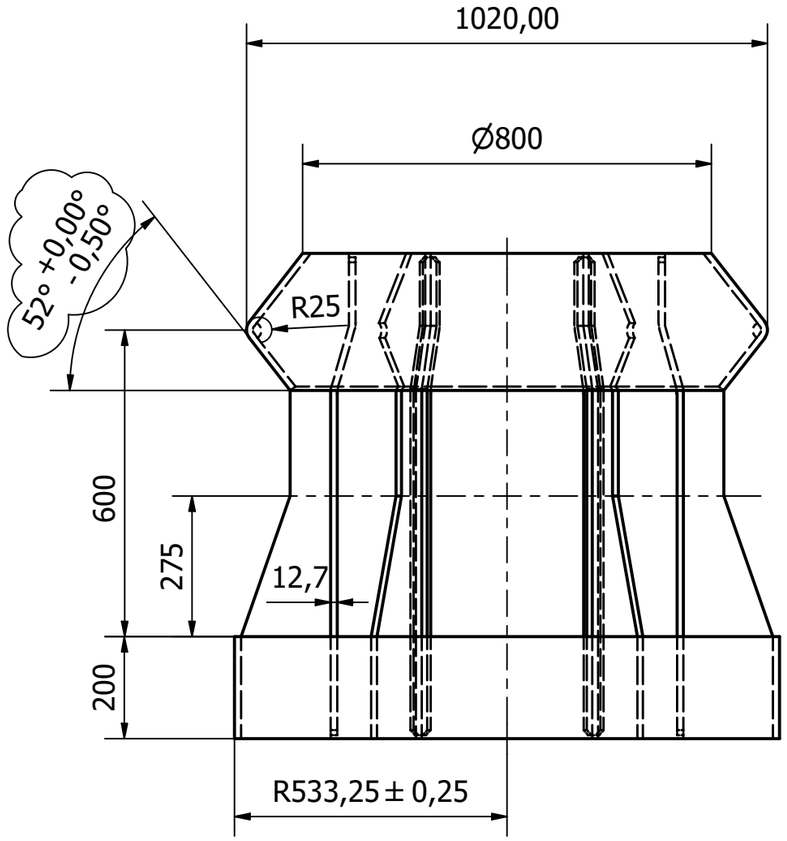

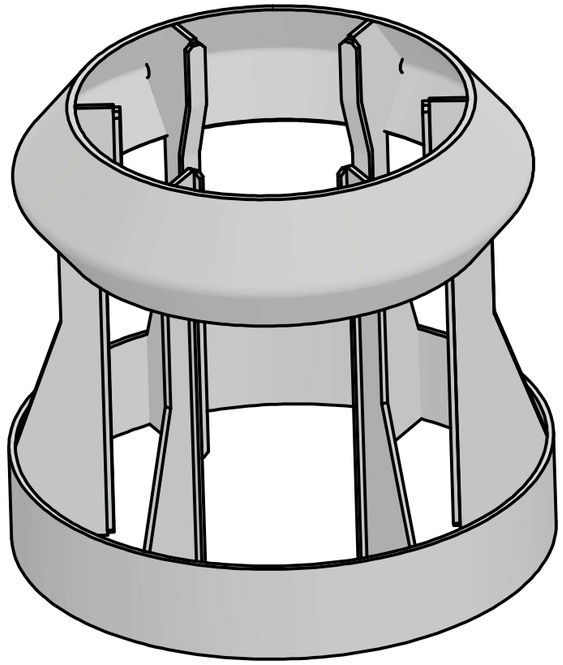

REFERENCE DOCUMENTS

GENERAL NOTES

1 - ONLY GENERAL TESTING DIMENSIONS ARE SHOWN IN THIS DRAWING. RIB DETAILS, LIFTING DEVICES AND OTHER FEATURES AS STRUCTURAL REINFORCEMENTS SHALL BE DETAILED BY SUPPLIER.

REV.	DESCRIPTION	DATE	EXEC.	CHECK	APROV.
A	REVISED WHERE INDICATED	18/3/25	CX4H	EVJN	NTHF
0	INITIAL ISSUE	21/7/22	RTVH	CX4H	U4B8

ACCORDING TO DI-1PBR-00337, INFORMATION IN THIS DOCUMENT IS PETROBRAS PROPERTY BEING PROHIBITED ITS USE OUTSIDE OF THEIR PURPOSE.
FORM OWNED TO PETROBRAS N-381 REV. M.

PETROBRAS

SUB

CLIENT E & P

JOB FPSO UNIT

AREA PRODUCTION

TITLE DUMMY HOA (TSUDL)

TECHNICAL DRAWING

SCALE 1 : 12

SHEET of

INTERNAL

N° I-DE-3010.00-1300-270-P56-025

MATERIAL ASTM A36

RUGOSITY (C.L.A) 1,6

SURFACE COATING

TREATMENT

LINEAR DIMENSIONS NOT INDICATED – BOILERMAKING

DIMENSIONS (mm)	DE 2 a <30	>30 a <120	>120 a <400	>400 a <1000	>1000 a <2000	>2000 a <4000	>4000 a <8000	>8000 a <12000
TOLERANCES	± 1	± 3	± 4	± 6	± 8	± 11	± 14	± 18

LINEAR DIMENSIONS NOT INDICATED – MACHINING

DIMENSIONS (mm)	DE 0,5 a <3	>3 a <6	>6 a <30	>30 a <120	>120 a <400	>400 a <1000	>1000 a <2000	>2000 a <4000
LENGHT	± 0,2	± 0,3	± 0,5	± 0,8	± 1,2	± 2,0	± 3,0	± 4,0
DIAMETER	± 0,1	± 0,1	± 0,2	± 0,3	± 0,5	± 0,8	± 1,2	± 2,0

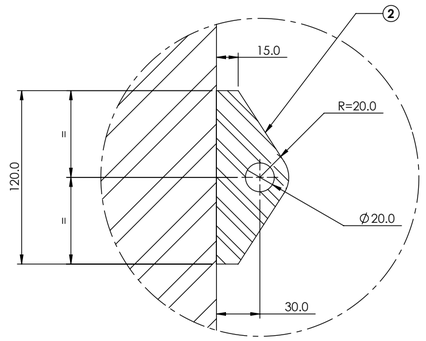

DETAIL "A"
TYPICAL
4x 90°

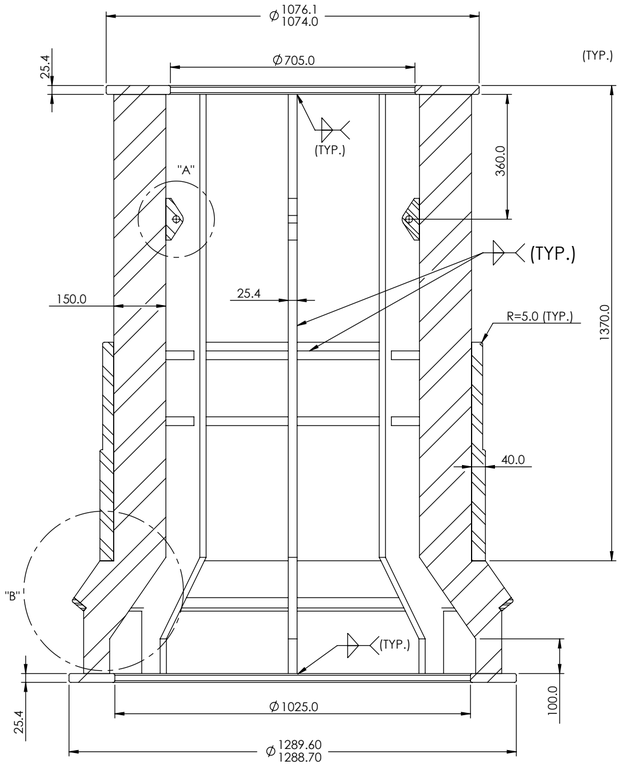

SECTION A-A

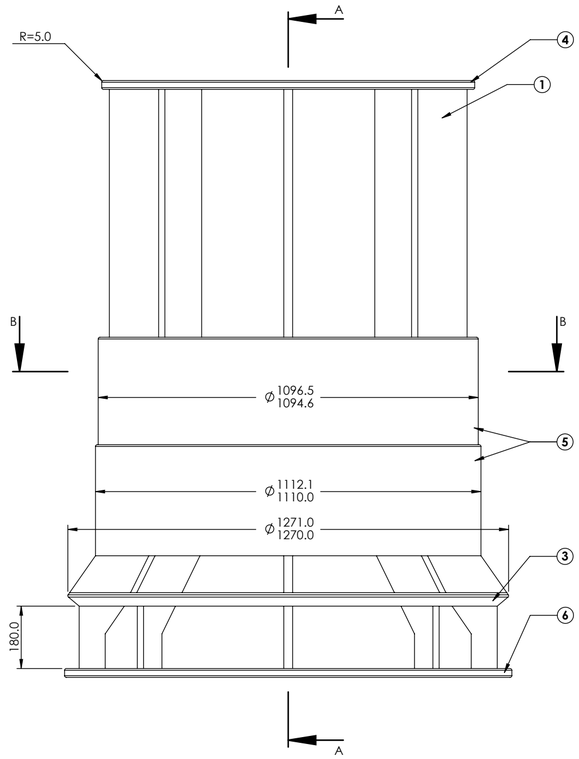

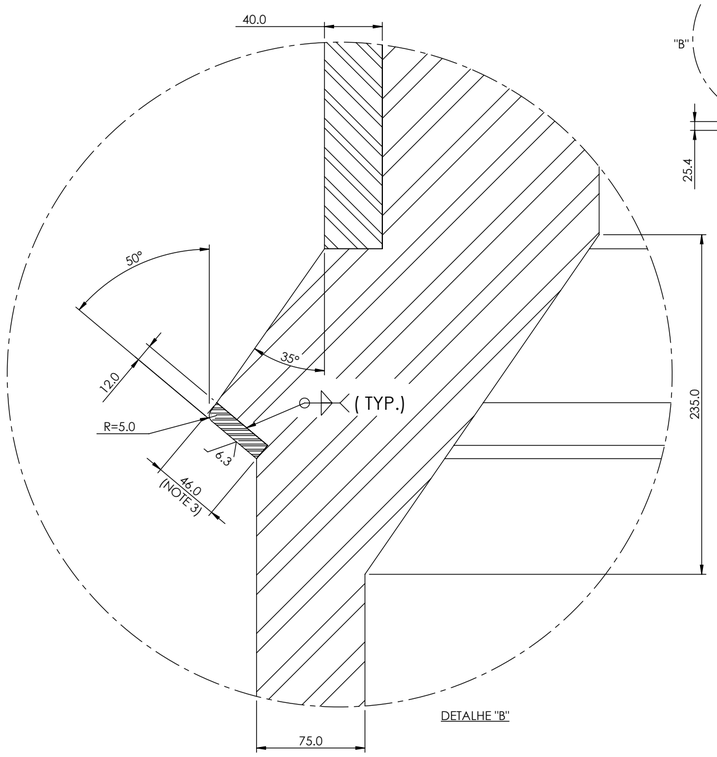

DETALHE "B"

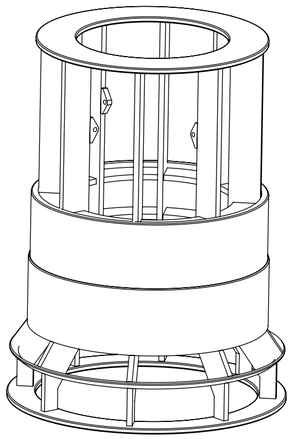

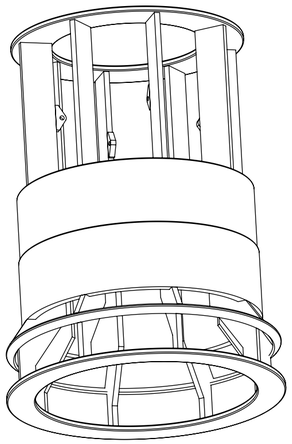

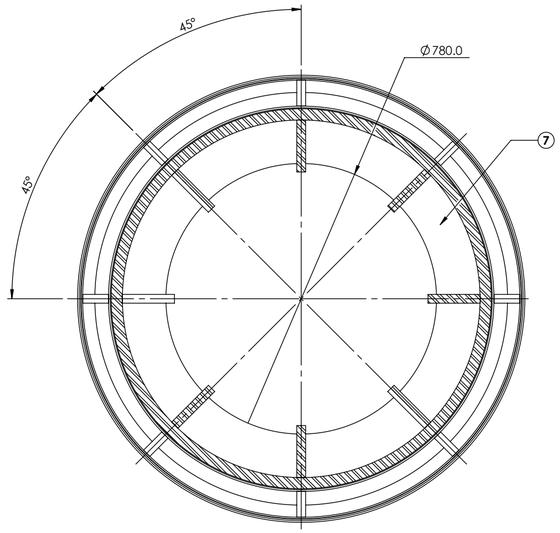

SECTION B-B

REFERENCE DOCUMENTS

GENERAL NOTES

1 - DO NOT PAINT

2 - ALL DIMENSIONS OF DIAMETER TAKE INTO ACCOUNT THE "CAP" ALREADY COATED.

3 - SURFACE SHALL BE MACHINED TO ENSURE UNIFORM SEATING OF DUMMY CAP ON LATCH BARS DURING FACTORY ACCEPTANCE TEST (FAT).

MATERIAL

1 - PLATE 1" - ASTM A36
2 - PLATE 1" - ASTM A36
3 - PLATE 1/2" - ASTM A36
4 - PLATE 1" - ASTM A36
5 - PLATE 40mm - ASTM A36
6 - PLATE 1" - ASTM A36
7 - PLATE 1" - ASTM A36

REV.	DESCRIPTION	DATE	EXEC.	CHECK	APPROV.
B	NOTE 3 ADDED AND RUGOSITY	22/05/2024	SUB/ES	CX4H	U4B8
A	TOLEREANCES REVISION	24/03/21	SUB/ES	CJLZ	BERL
Ø	ORIGINAL	07/07/20	SUB/ES	CJLZ	BERL

ACCORDING TO DI-1PBR-00337, INFORMATION IN THIS DOCUMENT IS PROPERTY OF PETROBRAS, BEING PROHIBITED OUTSIDE OF THEIR PURPOSE.
FORM OWNED TO PETROBRAS N-381 - REV.M

PETROBRAS | SUB

CLIENT: E & P
JOB: FPSO UNIT
AREA: PRODUCTION
TITLE: DUMMY CAP (TSUDL)

SOLIDWORKS 2018 | DE | -
SCALE: 1:12.5 | SHEET 1 of 1
INTERNO
No I-DE-3010.00-1300-279-P56-373

MATERIAL	WEIGHT (KG)	RUGOSITY (C.L.A)	SURFACE COATING	Zi-Ni
ASTM A36	1336.67	INDICATED	TREATMENT	-

LINEAR DIMENSIONS NOT INDICATED - BOILERMAKING

DIMENSIONS (mm)	DE 2 a ≤30	>30 a ≤120	>120 a ≤400	>400 a ≤1000	>1000 a ≤2000	>2000 a ≤4000	>4000 a ≤8000	>8000 a ≤12000
TOLERANCES	±1	±3	±4	±6	±8	±11	±14	±18

LINEAR DIMENSIONS NOT INDICATED - MACHINING

DIMENSIONS (mm)	DE 0.5 a ≤3	>3 a ≤6	>6 a ≤30	>30 a ≤120	>120 a ≤400	>400 a ≤1000	>1000 a ≤2000	>2000 a ≤4000
LENGHT	±0,2	±0,3	±0,5	±0,8	±1,2	±2,0	±3,0	±4,0
DIAMETER	±0,1	±0,1	±0,2	±0,3	±0,5	±0,8	±1,2	±2,0

A2 - 594 X 420

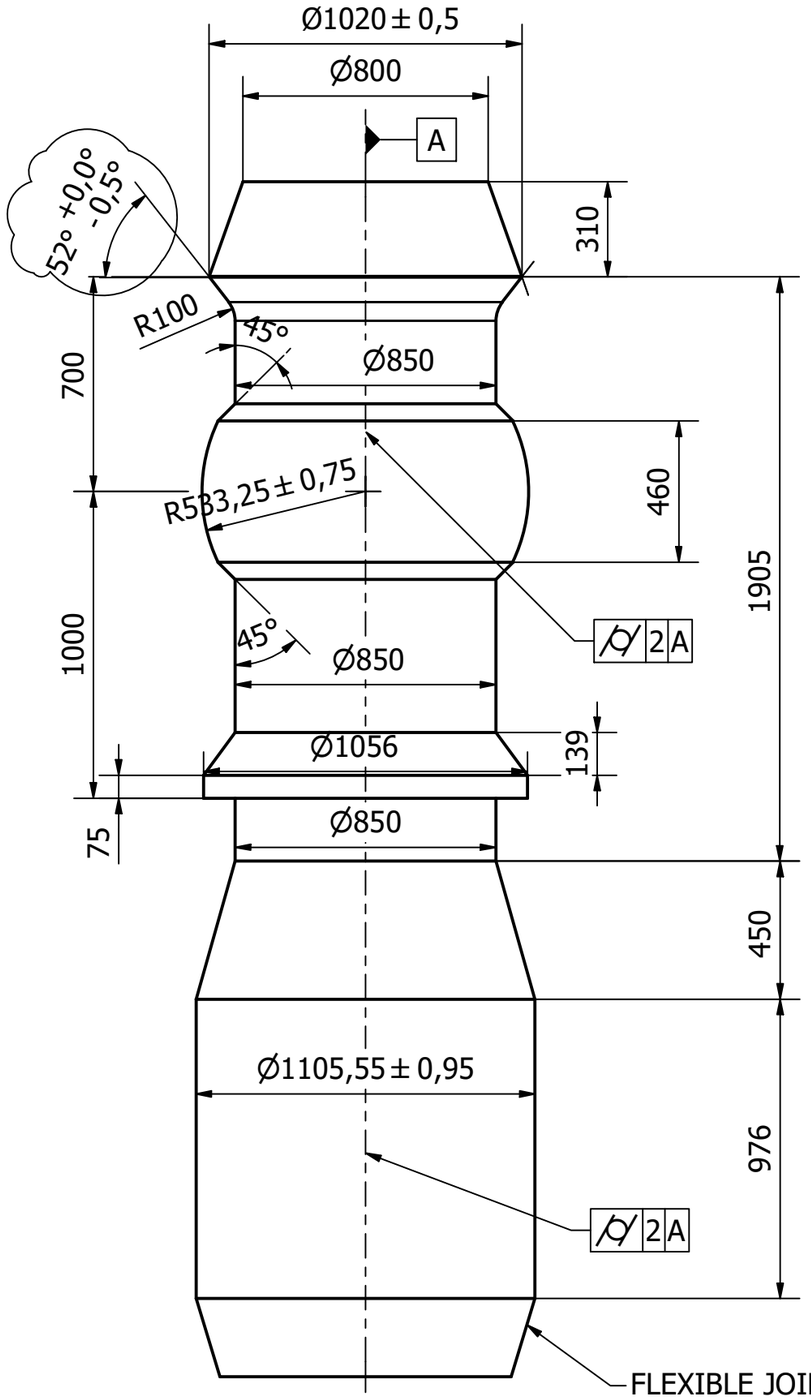

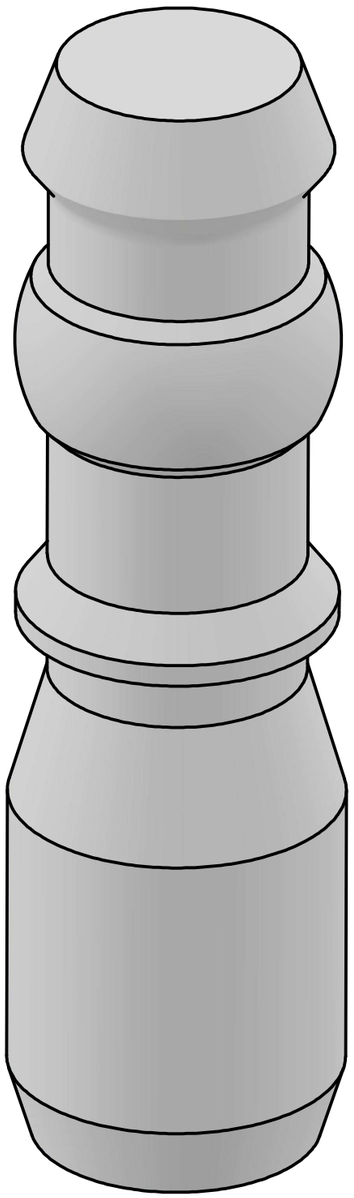

REFERENCE DOCUMENTS

I-DE-0000.00-0000-140-P56-002 - MOCKUP FOR FITUP TEST
I-DE-3010.00-1300-270-P56-025 - DUMMY HOA

GENERAL NOTES

1 - RISER TOP TERMINATION TO BE DETAILED BY THE RISER SUPPLIER

2 - ONLY EXTERNAL SHAPE SHALL BE CONSIDERED

REV.	DESCRIPTION	DATE	EXEC.	CHECK	APROV.
A	REVISED WHERE INDICATED	17/3/25	CX4H	EVJN	NTHF
0	INITIAL ISSUE	21/7/22	RTVH	CX4H	U4B8

ACCORDING TO DI-1PBR-00337, INFORMATION IN THIS DOCUMENT IS PETROBRAS PROPERTY BEING PROHIBITED ITS USE OUTSIDE OF THEIR PURPOSE.
FORM OWNED TO PETROBRAS N-381 REV. M.

PETROBRAS

SUB

CLIENT E & P

JOB FPSO UNIT

AREA PRODUCTION

TITLE TSUDL HANG-OFF ADAPTOR

TECHNICAL DRAWING

SCALE

SHEET of

INTERNAL

N° I-DE-3010.00-1300-279-P56-011

MATERIAL

RUGOSITY (C.L.A) 1,6

SURFACE COATING

TREATMENT

LINEAR DIMENSIONS NOT INDICATED – BOILERMAKING

DIMENSIONS (mm)	DE 2 a <30	>30 a <120	>120 a <400	>400 a <1000	>1000 a <2000	>2000 a <4000	>4000 a <8000	>8000 a <12000
TOLERANCES	± 1	± 3	± 4	± 6	± 8	± 11	± 14	± 18

LINEAR DIMENSIONS NOT INDICATED – MACHINING

DIMENSIONS (mm)	DE 0,5 a <3	>3 a <6	>6 a <30	>30 a <120	>120 a <400	>400 a <1000	>1000 a <2000	>2000 a <4000
LENGHT	± 0,2	± 0,3	± 0,5	± 0,8	± 1,2	± 2,0	± 3,0	± 4,0
DIAMETER	± 0,1	± 0,1	± 0,2	± 0,3	± 0,5	± 0,8	± 1,2	± 2,0

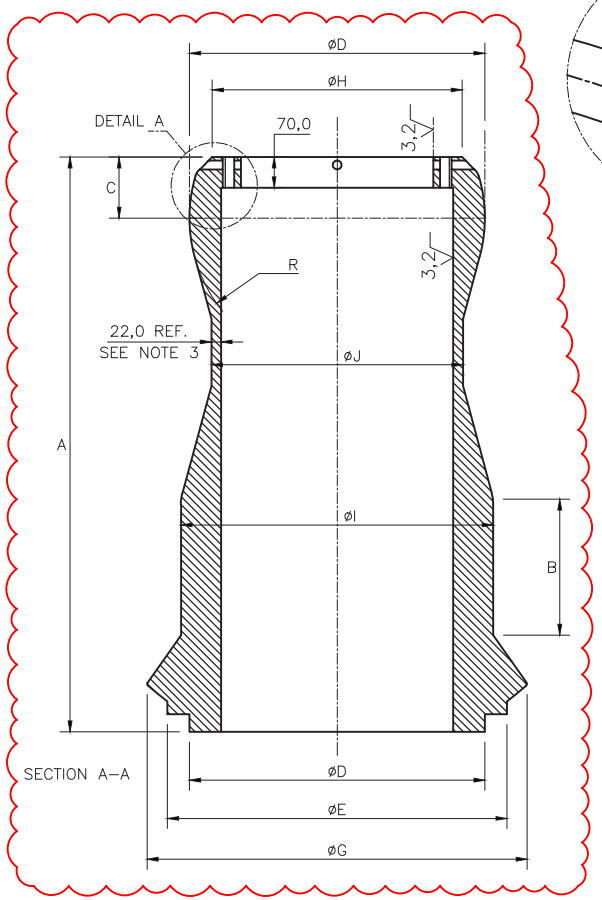

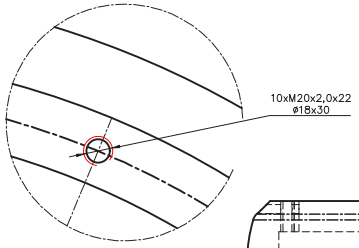

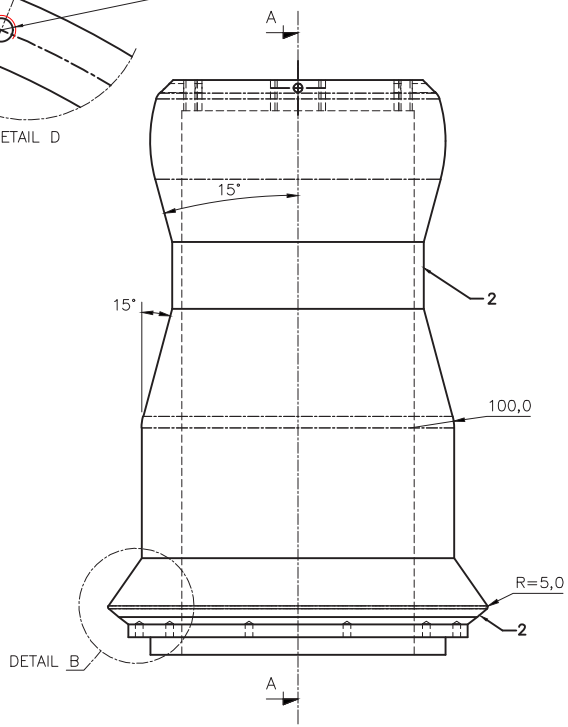

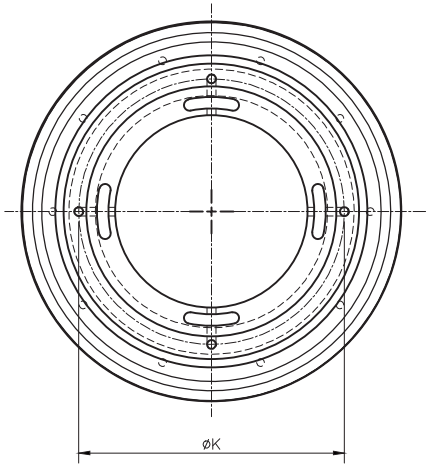

TOP VIEW

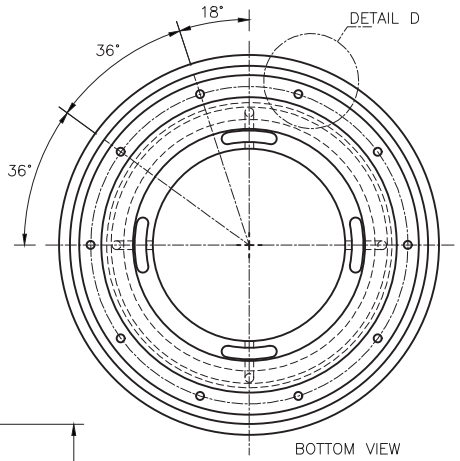

BOTTOM VIEW

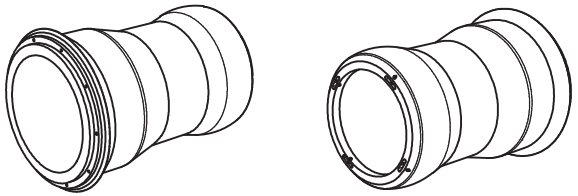

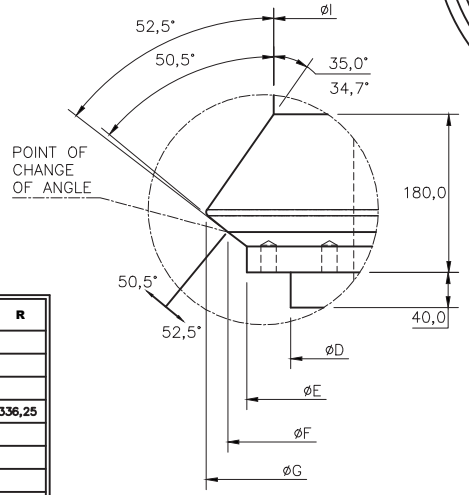

DETAIL B

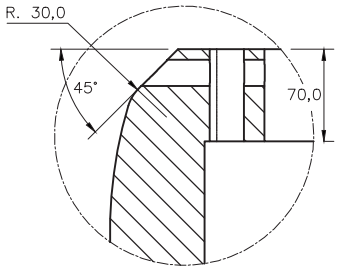

DETAIL A

I-TUBE	A	B	C	ØD	ØE	ØF	ØG	ØH	ØI	ØJ	ØK	R
26"												
28"												
30"												
32"	1310,0/1308,0	310,0	140,0/138,0	674,1/672,4	772,0/775,0	816,0	868,0/869,0	569,0	708,4/710,1	573,0	495,0	336,25
34"												
36"												
38"												
40"												
42"												
44"												
46"	1730,0/1728,0	290,0	200,0/198,0	1024,1/1022,9	1123,0/1125,0	1167,2	1219,0/1220,0	867,2	1058,9/1060,1	899,2	821,2	511,25
48"	1730,0/1728,0	290,0	200,0/198,0	1074,1/1072,9	1174,0/1176,0	1218,0	1270,0/1271,0	936,0	1108,9/1110,1	950,0	872,0	537,25

STANDARDIZED FORM BF 01-25-0001 - FORME A25

MATERIAL	ASTM A-36	WEIGHT		RUGOSITY (C.L.A)		SURFACE COATING	EP03
						TREATMENT	

LINEAR DIMENSIONS NOT INDICATED – BOILERMAKING								
DIMENSIONS (mm)	DE ≥ 0 ≤20	>20 ≤120	>120 ≤400	>400 ≤1000	>1000 ≤2000	>2000 ≤4000	>4000 ≤8000	>8000 ≤12000
TOLERANCES	±1	±3	±4	±6	±8	±11	±14	±18

LINEAR DIMENSIONS NOT INDICATED – MACHINING								
DIMENSIONS (mm)	DE 0,5 ≤3	>3 ≤6	>6 ≤30	>30 ≤120	>120 ≤400	>400 ≤1000	>1000 ≤2000	>2000 ≤4000
LENGHT	±0,2	±0,3	±0,5	±0,8	±1,2	±2,0	±3,0	±4,0
DIAMETER	±0,1	±0,1	±0,2	±0,3	±0,5	±0,8	±1,2	±2,0

REFERENCE DOCUMENTS

I–DE–3010.00–1300–279–PPC–330

GENERAL NOTES

1 – DIMENSIONS IN MILLIMETERS (UNLESS) INDICATED.

2 – PTFE WERE INDICATED EXTERNAL SURFACE

3 – FASTENING HOLES ARE AN EXAMPLE OF A SOLUTION FOR A FASTENING SYSYTEM. THE FASTENING METHOD MUST BE DEFINED BY RISER SUPPLIER.

4 – THE DIMENSIONS HEREIN SPECIFIED SHOULD BE VERIFIED AFTER FINAL COATING OF THE CAP DL–SI. THE MAXIMUM COATING THICKNESS SHALL NOT EXCEED 0,55MM.

REV.	DESCRIPTION	DATE	ENGD.	CHECK	APPROV.
B	GENERAL REVISION	MAR 25,2022	SUB/ES	CHIN	BERL
A	TOLERANCES REVISION	MAR 24,2021	SUB/ES	CALZ	BERL
0	ORIGINAL	JUL 07,2020	SUB/ES	CALZ	BERL

THE DATA, OR PART THEREOF ARE PETROBRAS PROPERTY AND THUS MUST NOT BE USED IN ANY WAY WITHOUT PERMISSION

PETRÓLEO BRASILEIRO S.A. PETROBRAS

SUB

CLIENT OR USER: E & P

JOB OR PROJECT: FPSO UNIT

AREA OR UNIT: PRODUCTION

TITLE: CAP DL – SI

DESIGN	SUB/ES	DRAWN	PDDP/TES	CHECK	CALZ	APPROVAL	BERL
SCALE	1:9	SIZE	A1	CC		SHEET	1 of 2
DATE	JUL 07,2020	No.	I–DE–3010.00–1300–279–P56–375				

325–BSDL_CAP DL_revA.DWG

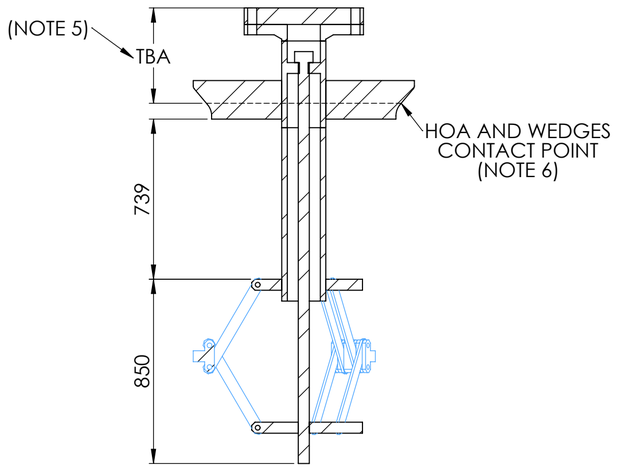

SECTION A-A

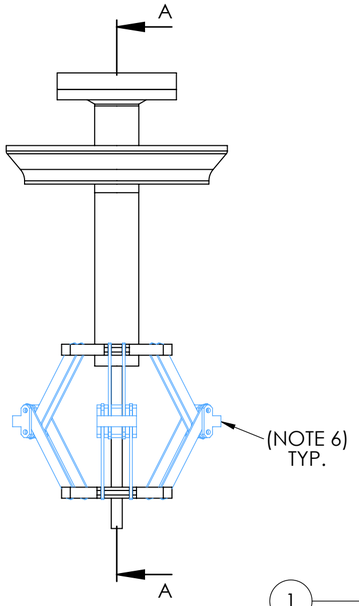

FRONT VIEW

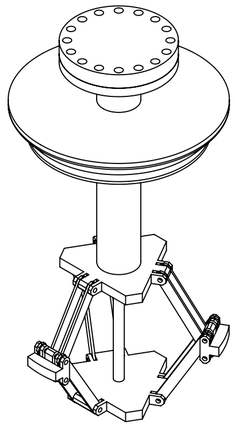

GENERAL VIEW

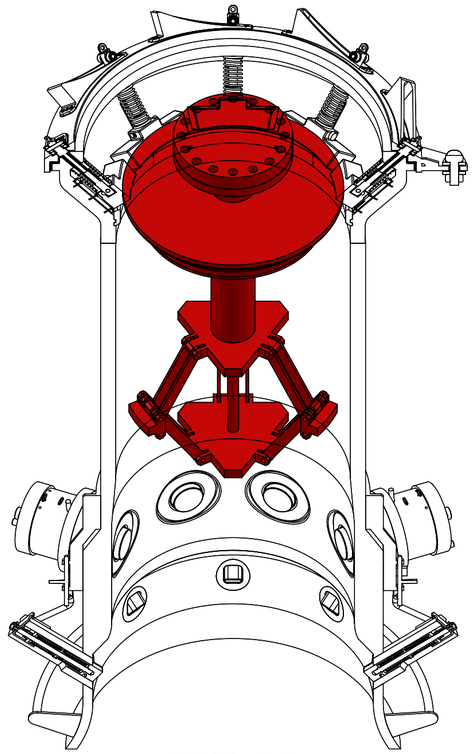

ILLUSTRATIVE

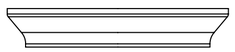

PLATE SUPPORT
(NOTE 6)

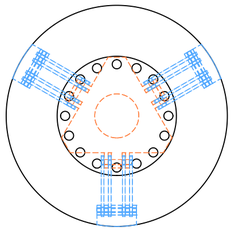

TOP VIEW

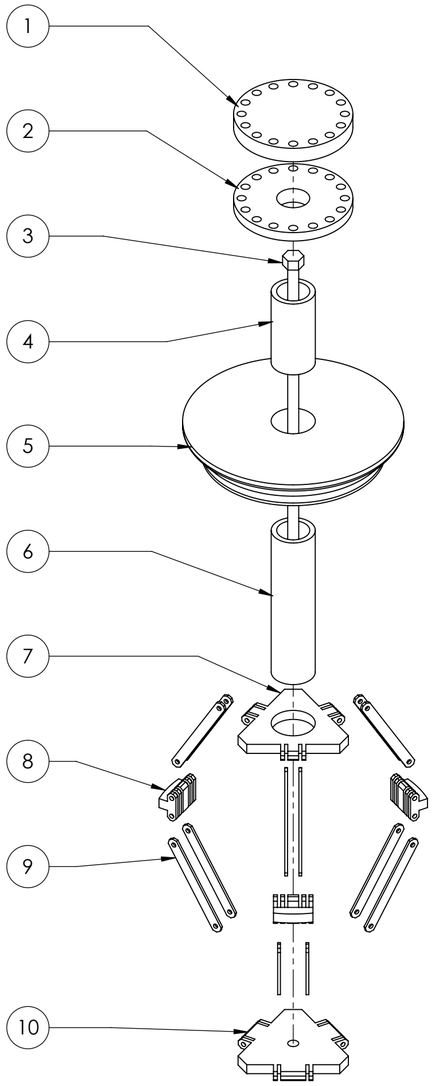

ITEM	DESCRIPTION	QTY.
1	BLIND FLANGE	1
2	API FLANGE	1
3	THREADED ACTUATOR	1
4	HOUSING TUBE	1
5	SUPPORT PLATE	1
6	EXTENSION TUBE	1
7	UPPER SUPPORT PLATE	1
8	HOLDER	3
9	ARTICULATION BAR	12
10	LOWER SUPPORT PLATE	1

CONCEPTUAL DRAWING
NOT FOR MANUFACTURE

REFERENCE DOCUMENTS

1. I-ET-3010.00-1519-140-P56-001 - UNIFIED DIVERLESS SUPPORT TUBE (TSUDL)

GENERAL NOTES

1. DIMENSIONS IN MILLIMETER, UNLESS OTHERWISE INDICATED.
2. FLANGES SPECIFICATION AS PER RISER TOP CONNECTOR FLANGE SELECTED FOR THE PROJECT, INCLUDING N2 TEST PORT.
3. THIS IS A CONCEPTUAL DRAWING TO GUIDE MOCK-UP DESIGN FOR SPOOL FIT UP.
4. PAINTING ON ALL EXPOSED SURFACES SHALL BE CONSIDERED.
5. FLANGE ELEVATION TO BE INFORMED WITHIN PROJECT DOCUMENTATION.
6. DIMENSIONS, TOLERANCES, SURFACE FINISH AND PLATE PROFILE REQUIREMENTS SHALL BE IN ACCORDANCE WITH HOA DRAWINGS AS PER REF. [1] AND TSUDL DETAILED DESIGN.

REV.	DESCRIPTION	DATE	EXEC.	CHECK	APPROV.
A	GENERAL REVIEW, INCLUDED EXPLODED VIEW AND BOM	15/08/2022	FLÁVIO BARROSO	JOSÉ MAURÍCIO	FABIO MAGALHÃES
Ø	ORIGINAL	18/03/2021	RAFAELLA ANDRADE	FLÁVIO BARROSO	FÁBIO MAGALHÃES

ACCORDING TO DI-1PBR-00337, INFORMATION IN THIS DOCUMENT IS PROPERTY OF PETROBRAS, BEING PROHIBITED OUTSIDE OF THEIR PURPOSE
STANDARDIZED FORM BY PETROBRAS N-381 - REV.M.

PETROBRAS | SUB/ES

CLIENT: STANDARD

JOB: STANDARDIZATION

AREA: DP&T - SUB

TITLE: RIGID RISER TOP CONNECTOR MOCKUP FOR FITUP TEST - CONCEPTUAL DRAWING

SOLIDWORKS 2018 | DE | -

SCALE: | SHEET 1 de 1

PUBLICO

No I-DE-0000.00-0000-140-P56-002

A2 - 594 X 420